OBTAIN DOOR/GLASS/REINFORCING/LOCK OPTION
CAPACITY FROM TABLES ON SHEETS 3 AND 4.

THESE DOORS ARE RATED FOR LARGE & SMALL MISSILE IMPACT.
SHUTTERS ARE NOT REQUIRED.

SERIES 'SUMMIT' ALUMINUM OUT-SWING DOOR

SINGLE (X) AND DOUBLE (XX) LEAF DOORS W/O TRANSOM SEE CHARTS ON SHEETS 3 AND 4 FOR DESIGN LOAD CAPACITY.

SINGLE (O/X) AND DOUBLE (O/XX) LEAF DOORS WITH TRANSOMS (WITH OR WITHOUT REINFORCING) SEE SHEETS 7 & 8 FOR HORIZONTAL MULLION CAPACITY CHART, LOWER VALUES FROM DOOR CAPACITY CHART OR HORIZONTAL MULLION (TRANSOM BAR) CAPACITY CHART WILL APPLY TO ENTIRE SYSTEM.

DOORS CAN ALSO BE USED WITH APPROVED ALDORA SMI-175, FS-300 AND SMI-090 STOREFRONT SYSTEMS (UNDER SEPARATE APPROVAL) TO BE REVIEWED BY BUILDING OFFICIAL.
FOR DOORS WITH STOREFRONT SYSTEM SEE SEPARATE APPROVAL FOR DOOR MULLION CAPACITY AND ANCHORING REQUIREMENTS.
THE LOWEST VALUE RESULTING FROM DOOR CAPACITY OR TRANSOM CAPACITY OR STOREFRONT APPROVAL WILL APPLY TO ENTIRE SYSTEM.

FOR INSTALLATIONS WHERE WATER INFILTRATION RESISTANCE IS REQUIRED SEE SHEET 9.

THIS PRODUCT HAS BEEN DESIGNED AND TESTED TO COMPLY WITH THE REQUIREMENTS OF THE 2020 (7TH EDITION)/2023 (8TH EDITION) FLORIDA BUILDING CODE INCLUDING HIGH VELOCITY HURRICANE ZONE (HVHZ).

1BY OR 2BY WOOD BUCKS & BUCK FASTENERS BY OTHERS, MUST BE DESIGNED AND INSTALLED ADEQUATELY TO TRANSFER APPLIED PRODUCT LOADS TO THE BUILDING STRUCTURE.

ANCHORS SHALL BE CORROSION RESISTANT, SPACED AS SHOWN ON DETAILS AND INSTALLED PER MANUF'S INSTRUCTIONS. SPECIFIED EMBEDMENT TO BASE MATERIAL SHALL BE BEYOND WALL DRESSING OR STUCCO.

A LOAD DURATION INCREASE IS USED IN DESIGN OF ANCHORS INTO WOOD ONLY.

ALL SHIMS TO BE HIGH IMPACT, NON-METALLIC AND NON-COMPRESSIBLE.

MATERIALS INCLUDING BUT NOT LIMITED TO STEEL/METAL SCREWS, THAT COME INTO CONTACT WITH OTHER DISSIMILAR MATERIALS SHALL MEET THE REQUIREMENTS OF THE 2020/2023 FLORIDA BLDG. CODE & ADOPTED STANDARDS.

THIS PRODUCT APPROVAL IS GENERIC AND DOES NOT PROVIDE INFORMATION FOR A SITE SPECIFIC PROJECT, i.e. LIFE SAFETY OF THIS PRODUCT, ADEQUACY OF STRUCTURE RECEIVING THIS PRODUCT AND SEALING AROUND OPENING FOR WATER INFILTRATION RESISTANCE ETC.
CONDITIONS NOT SHOWN IN THIS DRAWING ARE TO BE ANALYZED SEPARATELY, AND TO BE REVIEWED BY BUILDING OFFICIAL.

DESIGN LOADS SHOWN ARE BASED ON 'ALLOWABLE STRESS DESIGN (ASD)'.

MANUFACTURER'S LABEL SHALL BE LOCATED ON A READILY VISIBLE LOCATION IN ACCORDANCE WITH SECTION 1709.9.3 OF FLORIDA BUILDING CODE. LABELING TO COMPLY WITH SECTION 1709.9.2.

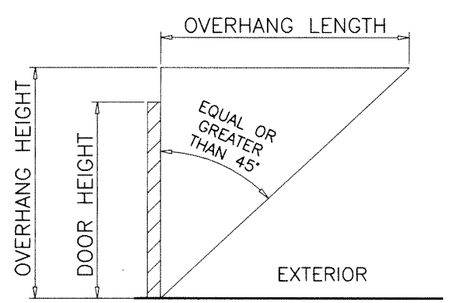

WATER INFILTRATION RESISTANCE IS NOT REQUIRED FOR DOORS PROTECTED BY AN OVERHANG AS SHOWN ABOVE OR DOORS LOCATED IN NON-HABITABLE AREAS.

LAMINATED GLASS
LAM. INSUL. GLASS
LARGE MISSILE IMPACT

Sealed: 7/12/2023

FL #17682

A- CONTRACTOR TO BE RESPONSIBLE FOR THE SELECTION, PURCHASE AND INSTALLATION OF THIS PRODUCT BASED ON THIS PRODUCT EVALUATION PROVIDED HE/SHE DOES NOT DEVIATE FROM THE CONDITIONS DETAILED ON THIS DOCUMENT.

B- THIS PRODUCT EVALUATION DOCUMENT WILL BE CONSIDERED INVALID IF ALTERED BY ANY MEANS.

C- SITE SPECIFIC PROJECTS SHALL BE PREPARED BY A FLORIDA REGISTERED ENGINEER OR ARCHITECT WHICH WILL BECOME THE ENGINEER OF RECORD (E.O.R.) FOR THE PROJECT AND WHO WILL BE RESPONSIBLE FOR THE PROPER USE OF THE P.E.D. ENGINEER OF RECORD, ACTING AS A DELEGATED ENGINEER TO THE P.E.D. ENGINEER SHALL SUBMIT TO THIS LATTER THE SITE SPECIFIC DRAWINGS FOR REVIEW.

D- THIS P.E.D. SHALL BEAR THE DATE AND ORIGINAL SEAL AND SIGNATURE OF THE PROFESSIONAL ENGINEER OF RECORD THAT PREPARED IT.

JALAL FAROOQ
LICENSE
No. 81223
STATE OF FLORIDA
PROFESSIONAL ENGINEER

AL-FAROOQ CORPORATION
ENGINEERS & PRODUCT DEVELOPMENT
9360 SUNSET DRIVE, SUITE 220
MIAMI, FLORIDA 33173 (C.A.N. 3538)
TEL. (305) 264-8100 FAX. (305) 262-6978

COMP-ANL\21-38F-AAG

SERIES 'SUMMIT' ALUMINUM OUT-SWING DOOR (L.M.I.)

Aldora Aluminum & Glass Products Inc.
4250 Coral Ridge Drive, Suite 101
Coral Springs, FL. 33065
Tel. (954) 784-6900 Fax. (954) 784-6901

revisions:

no	date	by	description
A	03.29.22		GLASS TYPES J & J1 REV.
B	07.01.23		UPDATED TO 2023 FBC

date: 05-04-21
scale: 1/2"=1'-0"
dr. by: TARIQ
chk. by:

drawing no.
21-38F

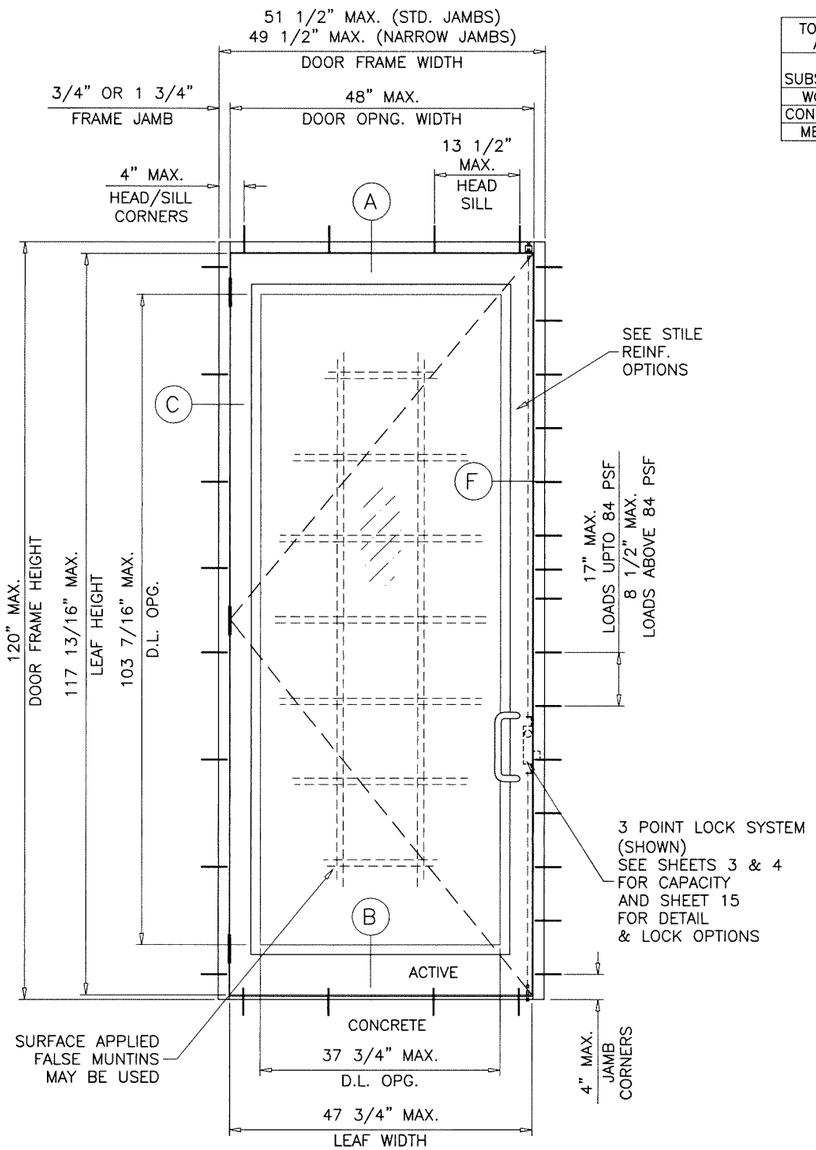

TOTAL NO. OF ANCHORS AT MTG. STILE ENDS	
SUBSTRATE	FOR FRAME HT. UPTO 120 IN.
WOOD	7
CONCRETE	5
METAL	5

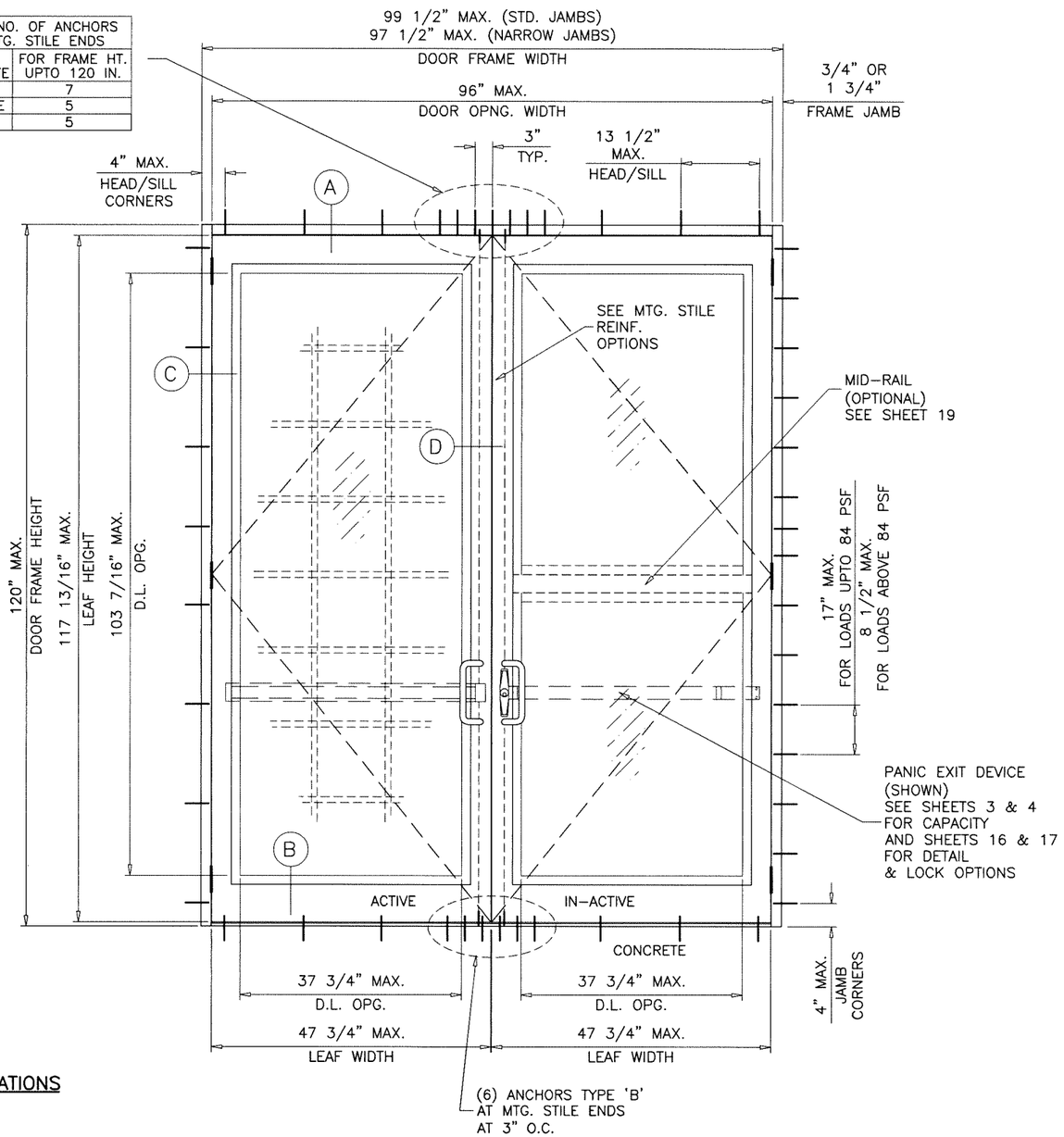

TYPICAL ELEVATIONS

Sealed: 7/12/2023

FRAME WIDTH = DOOR OPNG. WIDTH + 3.500 (STD. JAMBS)
= DOOR OPNG. WIDTH + 1.500 (NARROW JAMBS)
LEAF HEIGHT = DOOR FRAME HEIGHT − 2.188"
LEAF WIDTH (XX DOORS) = (DOOR OPNG. WIDTH − .250)/2 REGENT HINGES
= (DOOR OPNG. WIDTH − .750)/2 ALUMINUM HINGES
LEAF WIDTH (X DOORS) = DOOR OPNG. WIDTH − .187 REGENT HINGES
= DOOR OPNG. WIDTH − .375 ALUMINUM HINGES
GLASS DLO HEIGHT = LEAF HEIGHT − 14.375 (STD. BOTTOM RAIL)
= LEAF HEIGHT − 19.375 (HI-PROFILE BOTTOM RAIL)
GLASS DLO WIDTH = LEAF WIDTH − 10.000

JALAL FAROOQ
LICENSE
No. 81223
STATE OF FLORIDA
PROFESSIONAL ENGINEER

FL #17682

AL-FAROOQ CORPORATION
ENGINEERS & PRODUCT DEVELOPMENT
9360 SUNSET DRIVE, SUITE 220
MIAMI, FLORIDA 33173 (C.A.N. 3538)
TEL. (305) 264-8100 FAX. (305) 262-6978

COMP-ANL\21-38F-AAG

SERIES 'SUMMIT' ALUMINUM OUT-SWING DOOR (L.M.I.)

Aldora Aluminum & Glass Products Inc.
4250 Coral Ridge Drive, Suite 101
Coral Springs, FL. 33065
Tel. (954) 784-6900 Fax. (954) 784-6901

revisions:

no	date	by	description

date: 05-04-21
scale: 1/2"=1'-0"
dr. by: TARIQ
chk. by:

drawing no. 21-38F

GLAZING DETAILS LEVEL 'D' IMPACT

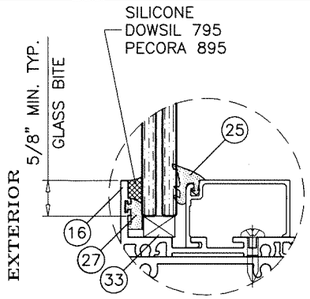

GLASS TYPES 'C', 'E' OR 'F'

9/16" LAM. GLASS

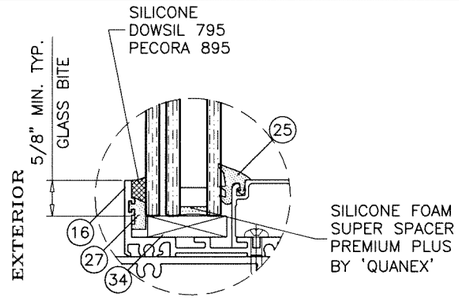

GLASS TYPE 'D' OR 'G'

1-5/16" OVERALL INSUL. LAM. GLASS

GLAZING DETAIL TRANSOM

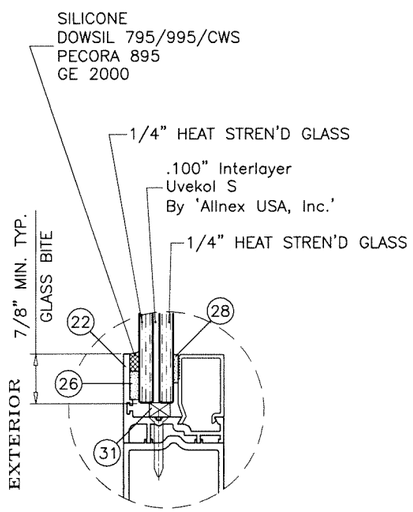

GLASS TYPE 'C'

9/16" LAM. GLASS

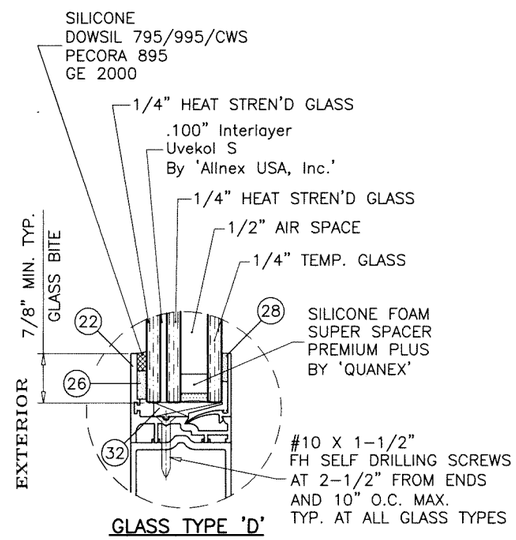

GLASS TYPE 'D'

1-5/16" OVERALL INSUL. LAM. GLASS

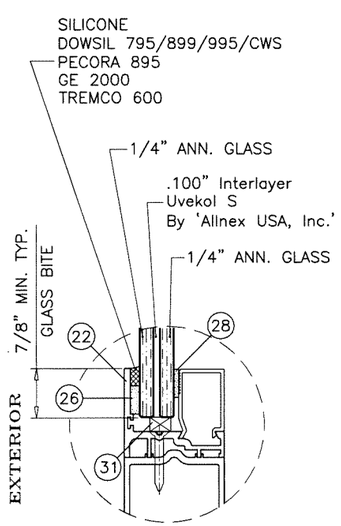

GLASS TYPE 'E'

9/16" LAM. GLASS

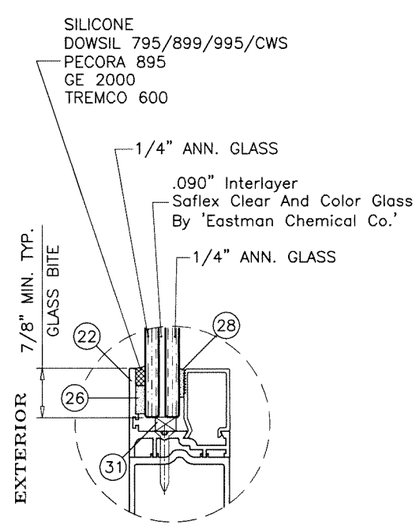

GLASS TYPE 'F'

9/16" LAM. GLASS

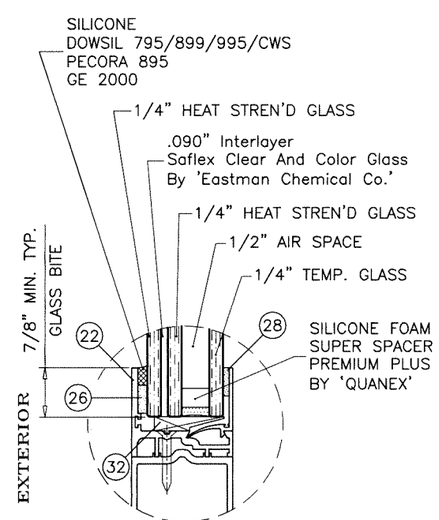

GLASS TYPE 'G'

1-5/16" OVERALL INSUL. LAM. GLASS

GLAZING DETAILS DOOR LEAF

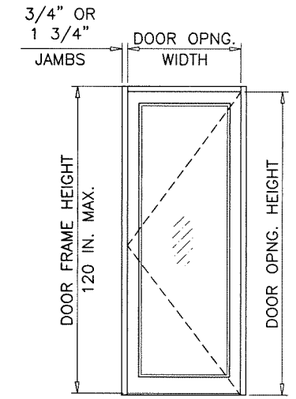

(X)

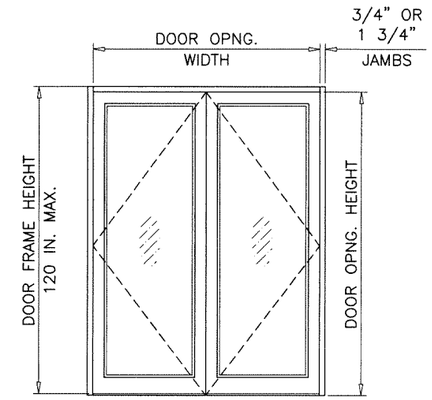

(XX)

DESIGN LOAD CAPACITY – PSF (GLASS)						
SINGLE (X)	DOUBLE (XX)		LOCK OPTIONS 1, 1A, 2, 3, 4 5, 6, 7 & 8		LOCK OPTIONS 1, 1A, 2, 3 7 & 8	
			GLASS TYPES 'E', 'F' & 'G'		GLASS TYPES 'C' & 'D'	
DOOR OPNG. WIDTH INCHES	DOOR OPNG. WIDTH INCHES	FRAME HEIGHT INCHES	*EXT.(+)	INT.(–)	*EXT.(+)	INT.(–)
36	72	85-3/4	90.0	90.0	100.0	100.0
48	96		90.0	90.0	100.0	100.0
36	72	97-3/4	90.0	90.0	100.0	100.0
48	96		–	–	100.0	100.0
36	72	109-3/4	–	–	100.0	100.0
48	96		–	–	100.0	100.0
36	72	120	–	–	100.0	100.0
48	96		–	–	100.0	100.0
			UN-REINFORCED MTG. STILES		REINFORCED MTG. STILES	

NOTE: DOOR OPNG HEIGHT = DOOR FRAME HEIGHT –1 3/4"

* SEE SHEET 9 FOR SILL TYPES QUALIFIED FOR WATER INFILTRATION RESISTANCE (POSITIVE DESIGN PRESSURE) LIMITED

NOTE:
GLASS CAPACITIES ON THIS SHEET ARE BASED ON ASTM E1300-09 (3 SEC. GUSTS) AND FLORIDA BUILDING COMMISSION DECLARATORY STATEMENT DCA05-DEC-219

JALAL FAROOQ
LICENSE
No. 81223
STATE OF FLORIDA
PROFESSIONAL ENGINEER

Sealed: 7/12/2023

FL #17682

AL-FAROOQ CORPORATION
ENGINEERS & PRODUCT DEVELOPMENT
9360 SUNSET DRIVE, SUITE 220
MIAMI, FLORIDA 33173 (C.A.N. 3538)
TEL. (305) 264-8100 FAX. (305) 262-6978
COMP-ANL\21-38F-AAG

SERIES 'SUMMIT' ALUMINUM OUT-SWING DOOR (L.M.I.)

Aldora Aluminum & Glass Products Inc.
4250 Coral Ridge Drive, Suite 101
Coral Springs, FL. 33065
Tel. (954) 784-6900 Fax. (954) 784-6901

revisions:			
no	date	by	description

date: 05-04-21
scale: 3/8" = 1"
dr. by: TARIQ
chk. by:

drawing no. 21-38F

GLAZING DETAILS LEVEL 'D' IMPACT

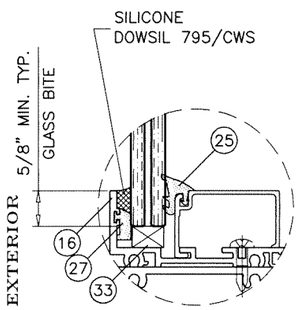

GLASS TYPE 'H'
9/16" LAM. GLASS

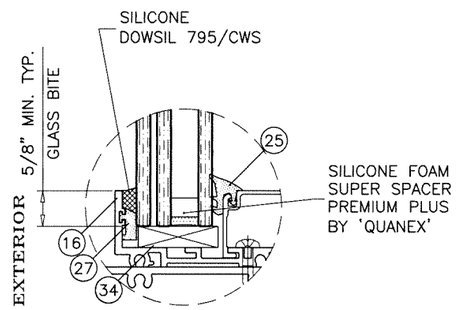

GLASS TYPE 'Hi'
1-5/16" OVERALL INSUL. LAM. GLASS

GLAZING DETAIL TRANSOM

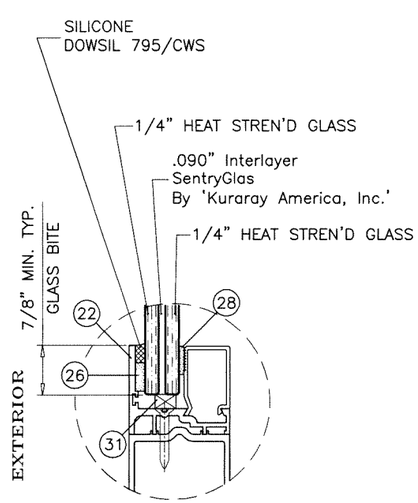

GLASS TYPE 'H'
9/16" LAM. GLASS

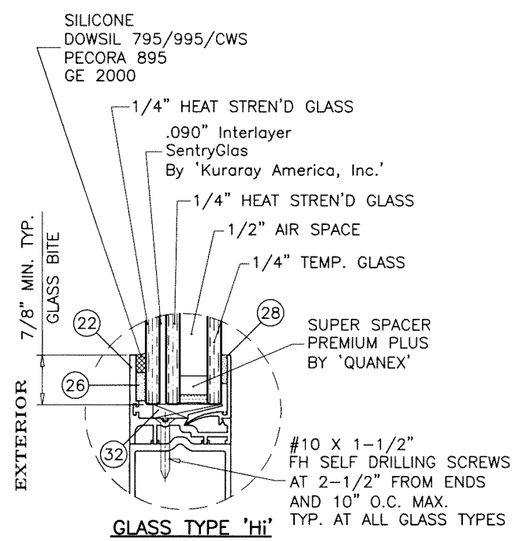

GLASS TYPE 'Hi'
1-5/16" OVERALL INSUL. LAM. GLASS

GLAZING DETAILS DOOR LEAF

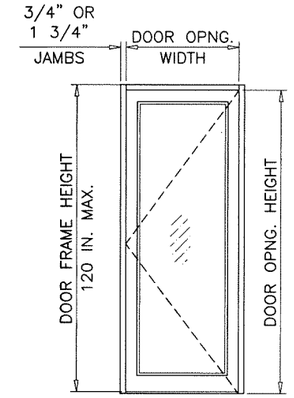

(X)

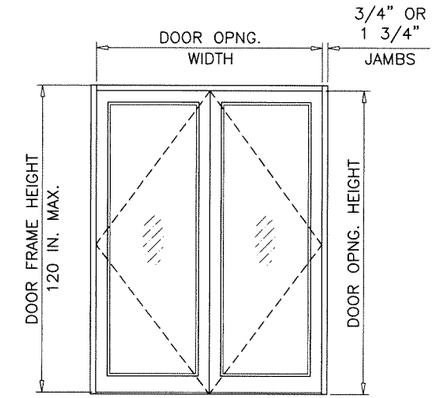

(XX)

DESIGN LOAD CAPACITY – PSF (GLASS)						
SINGLE (X)	DOUBLE (XX)		LOCK OPTIONS 1, 1A, 2, 3, 4 5, 6, 7 & 8		LOCK OPTIONS 1, 1A, 2, 3 7 & 8	
			GLASS TYPE 'H' & 'Hi'		GLASS TYPES 'H' & 'Hi'	
DOOR OPNG. WIDTH INCHES	DOOR OPNG. WIDTH INCHES	FRAME HEIGHT INCHES	*EXT.(+)	INT.(–)	*EXT.(+)	INT.(–)
36	72	85-3/4	65.0	65.0	100.0	100.0
48	96		65.0	65.0	100.0	100.0
36	72	97-3/4	65.0	65.0	100.0	100.0
48	96		65.0	65.0	100.0	100.0
36	72	109-3/4	65.0	65.0	100.0	100.0
48	96		65.0	65.0	100.0	100.0
36	72	118"	65.0	65.0	100.0	100.0
48	96		65.0	65.0	100.0	100.0
36	72	120	–	–	100.0	100.0
48	96		–	–	100.0	100.0
			UN-REINFORCED MTG. STILES		REINFORCED MTG. STILES	

NOTE: DOOR OPNG HEIGHT = DOOR FRAME HEIGHT –1 3/4"

*
SEE SHEET 9 FOR SILL TYPES QUALIFIED
FOR WATER INFILTRATION RESISTANCE
(POSITIVE DESIGN PRESSURE) LIMITED

NOTE:
GLASS CAPACITIES ON THIS SHEET ARE
BASED ON ASTM E1300-09 (3 SEC. GUSTS)
AND FLORIDA BUILDING COMMISSION
DECLARATORY STATEMENT DCA05-DEC-219

Sealed: 7/12/2023

JALAL FAROOQ
LICENSE
No. 81223
STATE OF FLORIDA
PROFESSIONAL ENGINEER

FL #17682

AL-FAROOQ CORPORATION
ENGINEERS & PRODUCT DEVELOPMENT
9360 SUNSET DRIVE, SUITE 220
MIAMI, FLORIDA 33173 (C.A.N. 3538)
TEL. (305) 264-8100 FAX. (305) 262-6978

COMP-ANL\21-38F-AAG

SERIES 'SUMMIT' ALUMINUM OUT-SWING DOOR (L.M.I.)

Aldora Aluminum & Glass Products Inc.
4250 Coral Ridge Drive, Suite 101
Coral Springs, FL. 33065
Tel. (954) 784-6900 Fax. (954) 784-6901

revisions:

no	date	by	description

date: 05-04-21
scale: 3/8" = 1"
dr. by: TARIQ
chk. by:

drawing no.
21-38F

GLAZING DETAILS LEVEL 'E' IMPACT

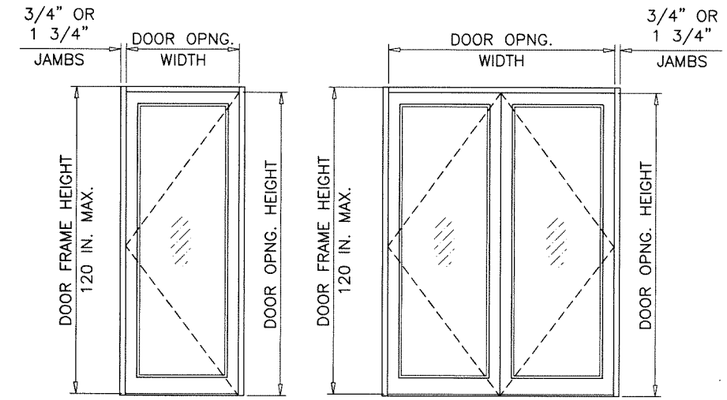

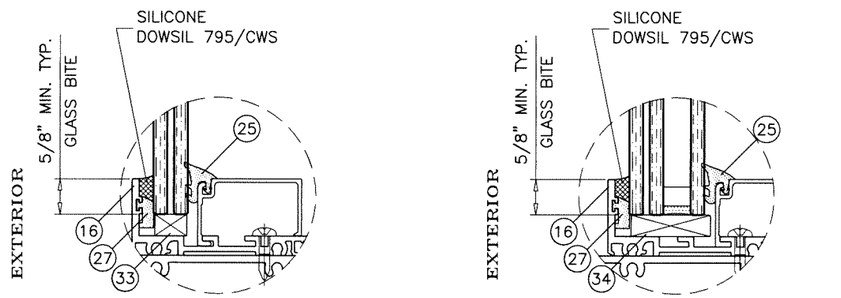

GLAZING DETAIL TRANSOM

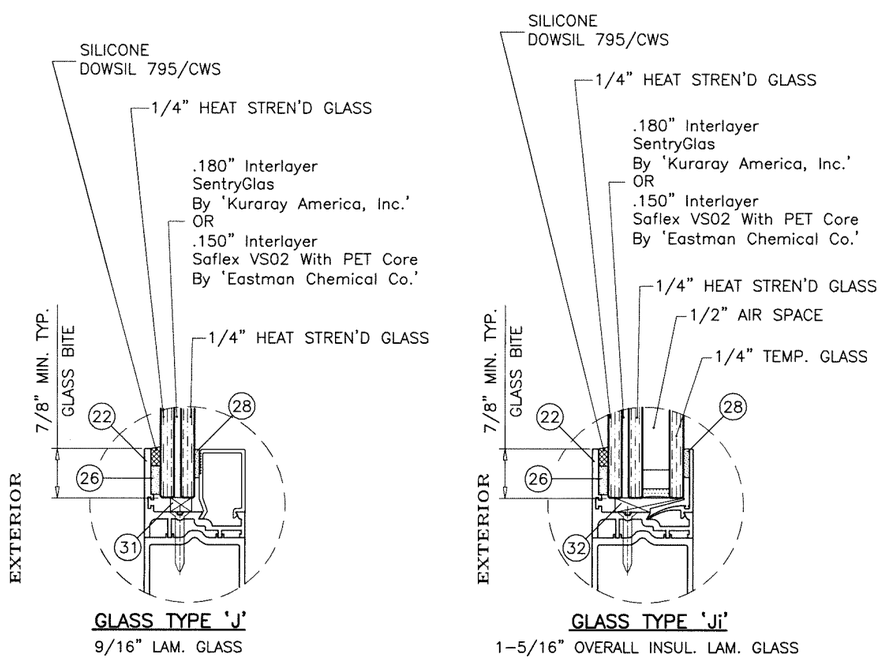

GLAZING DETAILS DOOR LEAF

DESIGN LOAD CAPACITY – PSF (GLASS)				
SINGLE (X)	DOUBLE (XX)		LOCK OPTIONS 1, 1A, 6 & 7	
			GLASS TYPES 'J' & 'Ji'	
DOOR OPNG. WIDTH INCHES	DOOR OPNG. WIDTH INCHES	FRAME HEIGHT INCHES	*EXT.(+)	INT.(–)
36	72	85–3/4	100.0	100.0
48	96		100.0	100.0
36	72	97–3/4	100.0	100.0
48	96		100.0	100.0
36	72	109–3/4	100.0	100.0
48	96		100.0	100.0
36	72	120	100.0	100.0
48	96		100.0	100.0
			REINFORCED MTG. STILES	

NOTE: DOOR OPNG HEIGHT = DOOR FRAME HEIGHT –1 3/4"

*
SEE SHEET 9 FOR SILL TYPES QUALIFIED FOR WATER INFILTRATION RESISTANCE (POSITIVE DESIGN PRESSURE) LIMITED

NOTE:
GLASS CAPACITIES ON THIS SHEET ARE BASED ON ASTM E1300–09 (3 SEC. GUSTS) AND FLORIDA BUILDING COMMISSION DECLARATORY STATEMENT DCA05–DEC–219

Sealed: 7/12/2023

JALAL FAROOQ
LICENSE
No. 81223
STATE OF FLORIDA
PROFESSIONAL ENGINEER

FL #17682

AL-FAROOQ CORPORATION
ENGINEERS & PRODUCT DEVELOPMENT
9360 SUNSET DRIVE, SUITE 220
MIAMI, FLORIDA 33173 (C.A.N. 3538)
TEL. (305) 264-8100 FAX. (305) 262-6978

COMP–ANL\21–38F–AAG

SERIES 'SUMMIT' ALUMINUM OUT–SWING DOOR (L.M.I.)

Aldora Aluminum & Glass Products Inc.
4250 Coral Ridge Drive, Suite 101
Coral Springs, FL. 33065
Tel. (954) 784–6900 Fax. (954) 784–6901

revisions:			
no	date	by	description

date: 05–04–21
scale: 3/8" = 1"
dr. by: TARIQ
chk. by:

drawing no. 21–38F

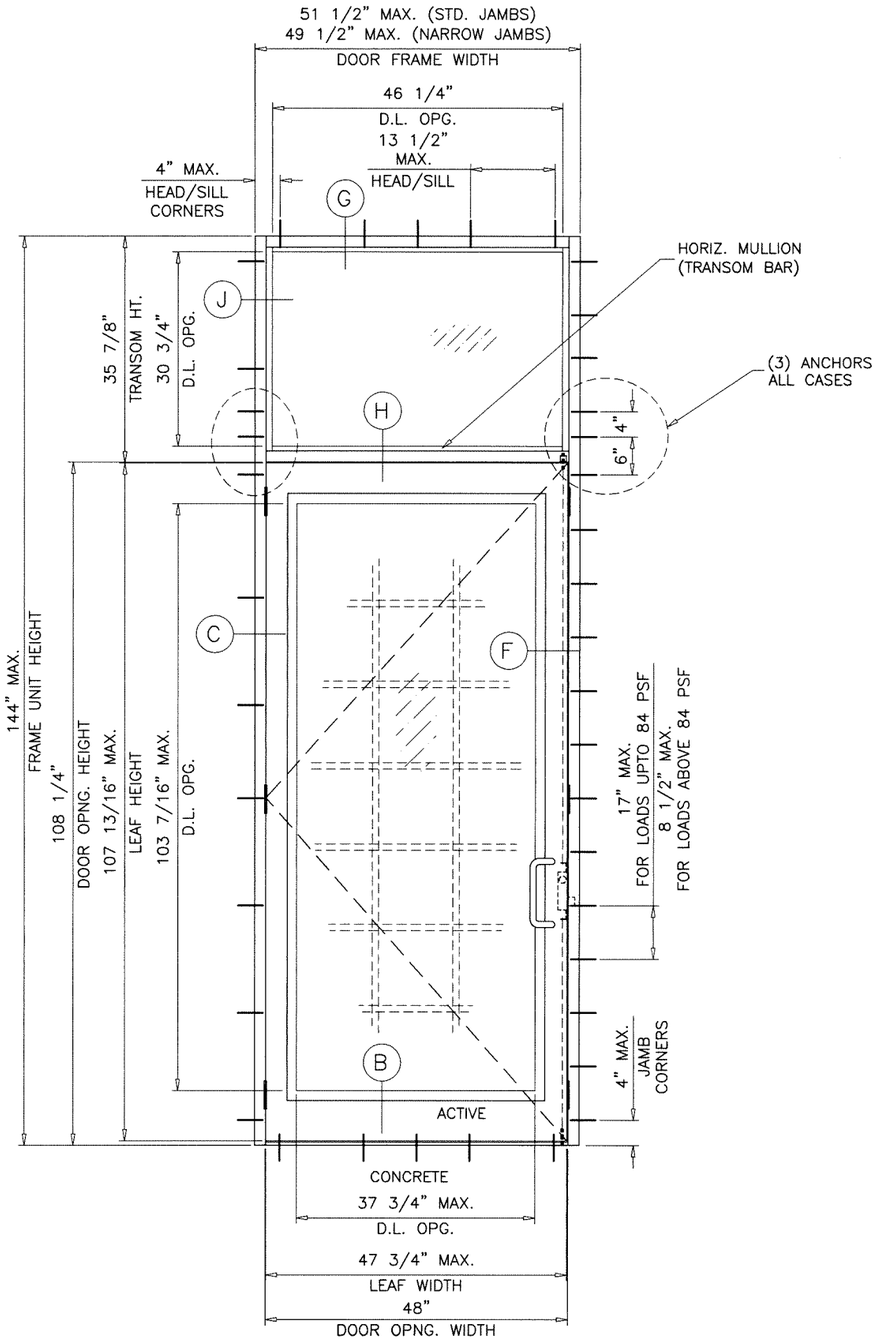

(O/X)

TYPICAL ELEVATION

DOOR W/ TRANSOM

DLO WIDTH (TRANSOM) = DOOR FRAME WIDTH – 5.25" (STD. JAMBS)
= DOOR FRAME WIDTH – 3.25" (NARROW JAMBS)
DLO HEIGHT (TRANSOM) = TRANSOM HEIGHT – 5.125"

NOTE:
FOR DOORS CAPACITY SEE SHEETS 3 AND 4.
FOR HORIZONTAL MULLION (TRANSOM BAR) CAPACITY SEE SHEET 7.
LOWER VALUES FROM DOORS OR HORIZONTAL MULLION (TRANSOM BAR) CHART WILL APPLY TO ENTIRE SYSTEM.

Sealed: 7/12/2023

JALAL FAROOQ
LICENSE
No. 81223
STATE OF FLORIDA
PROFESSIONAL ENGINEER

FL #17682

AL-FAROOQ CORPORATION
ENGINEERS & PRODUCT DEVELOPMENT
9360 SUNSET DRIVE, SUITE 220
MIAMI, FLORIDA 33173 (C.A.N. 3538)
TEL. (305) 264-8100 FAX. (305) 262-6978

COMP-ANL\21-38F-AAG

SERIES 'SUMMIT' ALUMINUM OUT-SWING DOOR (L.M.I.)

Aldora Aluminum & Glass Products Inc.
4250 Coral Ridge Drive, Suite 101
Coral Springs, FL. 33065
Tel. (954) 784-6900 Fax. (954) 784-6901

revisions:

no	date	by	description

date: 05-04-21
scale: 1/2"=1'-0"
dr. by: TARIQ
chk. by:

drawing no. 21-38F

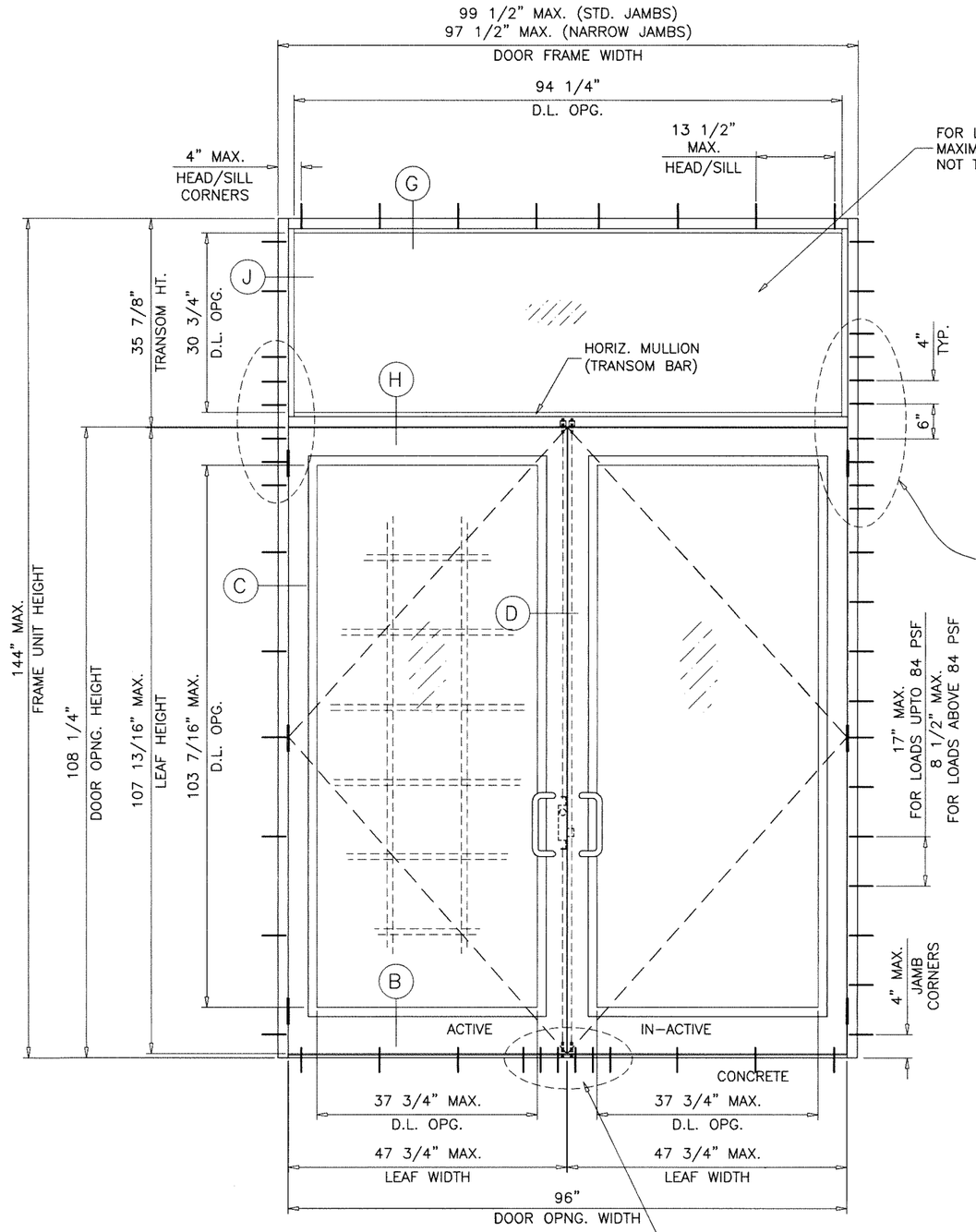

(O/XX)

TYPICAL ELEVATION

DOOR W/ TRANSOM

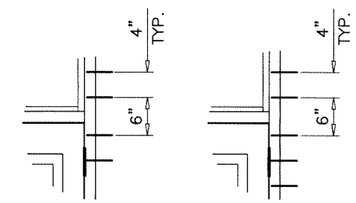

SUBSTRATE	NO. OF ANCHORS AT TRANSOM ENDS	
	WITHOUT REINF.	WITH REINF.
WOOD	5	6
MASONRY	5	8
CONCRETE	4	4
METAL	4	5

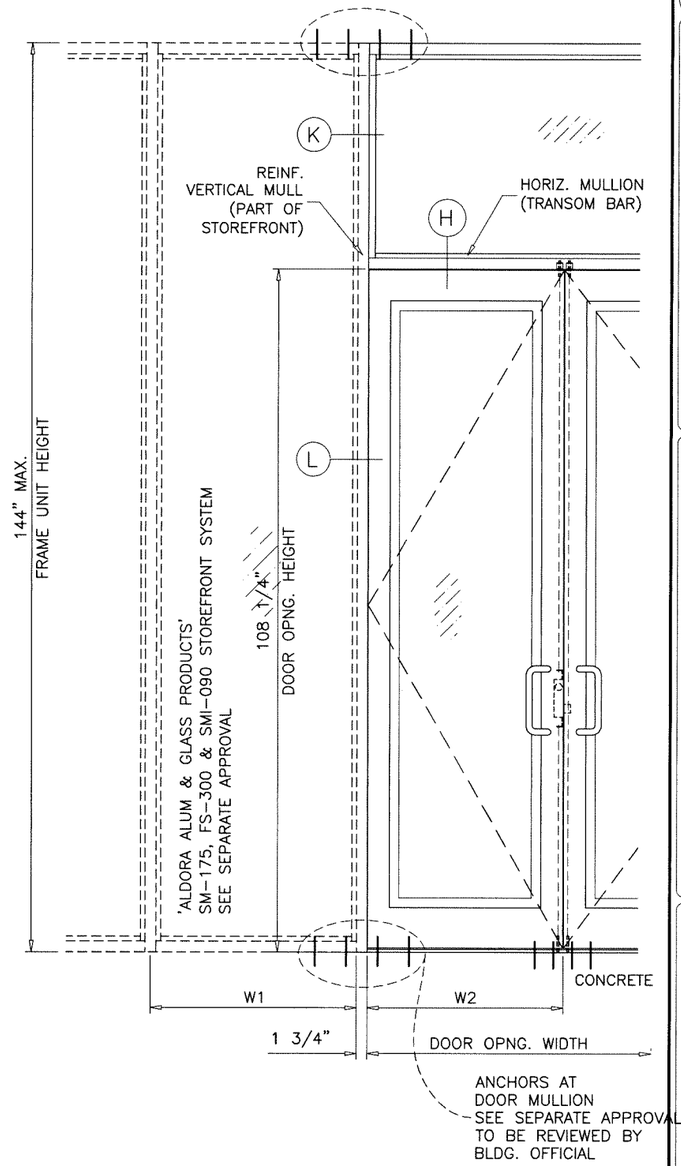

DLO WIDTH (TRANSOM) = DOOR FRAME WIDTH – 5.25" (STD. JAMBS)
= DOOR FRAME WIDTH – 3.25" (NARROW JAMBS)

DLO HEIGHT (TRANSOM) = TRANSOM HEIGHT – 5.125"

$$\text{VERT. MULLION TRIB. WIDTH (W)} = \frac{W1 + W2}{2} + 1.750$$

NOTE:
FOR DOORS CAPACITY SEE SHEETS 3 AND 4.
FOR HORIZONTAL MULLION (TRANSOM BAR) CAPACITY SEE SHEET 8.
LOWER VALUES FROM DOORS OR HORIZONTAL MULLION (TRANSOM BAR) CHART WILL APPLY TO ENTIRE SYSTEM.

Sealed: 7/12/2023

JALAL FAROOQ LICENSE No. 81223 STATE OF FLORIDA PROFESSIONAL ENGINEER

FL #17682

AL-FAROOQ CORPORATION
ENGINEERS & PRODUCT DEVELOPMENT
9360 SUNSET DRIVE, SUITE 220
MIAMI, FLORIDA 33173 (C.A.N. 3538)
TEL. (305) 264-8100 FAX. (305) 262-6978

COMP-ANL\21-38F-AAG

SERIES 'SUMMIT' ALUMINUM OUT-SWING DOOR (L.M.I.)

Aldora Aluminum & Glass
4250 Coral Ridge Drive, Suite 101
Coral Springs, FL. 33065
Tel. (954) 784-6900 Fax. (954) 784-6901

revisions:			
no	date	by	description

date: 05-04-21
scale: 1/2"=1'-0"
dr. by: TARIQ
chk. by:

drawing no. 21-38F

SINGLE DOOR HORIZONTAL MULLION (TRANSOM BAR)

DESIGN LOAD CAPACITY

NOMINAL DIMS.			GLASS E, F, G H, Hi, J, Ji WITHOUT REINF.	GLASS C, D H, Hi, J, Ji WITH REINF.
OPNG. WIDTH INCHES	DOOR OPNG. HEIGHT INCHES	TRANSOM HEIGHT INCHES	*EXT. (+) INT. (−)	*EXT. (+) INT. (−)
36	84	20	100.0	100.0
		24	100.0	100.0
		26	100.0	100.0
		28	100.0	100.0
		32	100.0	100.0
		36	–	100.0
		40	–	100.0
		44	–	91.0
		48	–	83.7
42		20	89.0	100.0
		24	85.7	100.0
		26	84.1	100.0
		28	–	100.0
		32	–	100.0
		36	–	100.0
		40	–	100.0
		44	–	91.0
		48	–	83.7
48		20	67.4	100.0
		24	64.9	100.0
		26	–	100.0
		28	–	100.0
		32	–	100.0
		36	–	100.0
		40	–	100.0
36	96"	20	100.0	100.0
		24	100.0	100.0
		26	100.0	100.0
		28	100.0	100.0
		32	99.6	100.0
		36	–	100.0
		40	–	100.0
		44	–	91.0
		48	–	83.7
42		20	79.8	100.0
		24	77.1	100.0
		26	75.9	100.0
		28	–	100.0
		32	–	100.0
		36	–	100.0
		40	–	100.0
		44	–	91.0
		48	–	83.7
48		20	60.4	100.0
		24	58.4	100.0
		26	–	100.0
		28	–	100.0
		32	–	100.0
		36	–	100.0
		40	–	100.0
		42	–	95.7

SINGLE DOOR HORIZONTAL MULLION (TRANSOM BAR)

DESIGN LOAD CAPACITY

NOMINAL DIMS.			GLASS E, F, G H, Hi, J, Ji WITHOUT REINF.	GLASS C, D H, Hi, J, Ji WITH REINF.
OPNG. WIDTH INCHES	DOOR OPNG. HEIGHT INCHES	TRANSOM HEIGHT INCHES	*EXT. (+) INT. (−)	*EXT. (+) INT. (−)
36	108	20	99.6	100.0
		24	96.6	100.0
		26	95.2	100.0
		28	93.8	100.0
		32	91.1	100.0
		36	–	100.0
42		20	72.3	100.0
		24	70.1	100.0
		26	69.1	100.0
		28	–	100.0
		32	–	100.0
		36	–	100.0
48		20	54.7	100.0
		24	53.1	100.0
		26	–	100.0
		28	–	100.0
		32	–	97.3
		36	–	94.6
36	118	20	92.4	100.0
		24	89.8	100.0
		26	88.6	100.0
42		20	67.1	100.0
		24	65.2	100.0
		26	64.3	100.0
46		20	53.9	100.0
		24	–	100.0
		26	–	100.0
48		20	50.8	98.7
		24	49.3	95.9
		26	–	94.6
36	120	20	91.1	100.0
		24	88.6	100.0
		26	87.3	100.0
42		20	66.1	100.0
		24	64.3	100.0
		26	63.4	100.0
46		20	53.2	100.0
		24	52.4	100.0
		26	50.0	100.0
48		20	48.6	97.3
		24	48.6	94.6

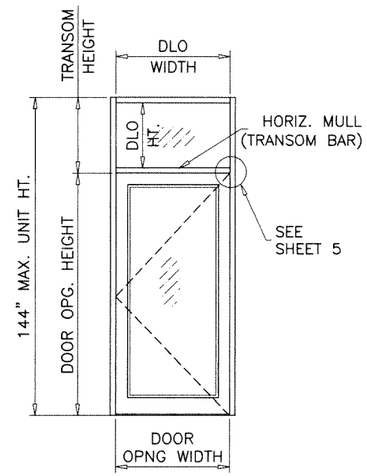

(O/X)

NOTE:
FOR DOORS CAPACITY SEE SHEETS 3 AND 4.
FOR HORIZONTAL MULLION (TRANSOM BAR) CAPACITY SEE CHART ABOVE.
LOWER VALUES FROM DOORS OR HORIZONTAL MULLION (TRANSOM BAR) CHART WILL APPLY TO ENTIRE SYSTEM.

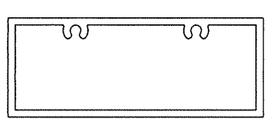

TRANSOM BAR
HORIZONTAL MULLION
WITHOUT REINFORCING

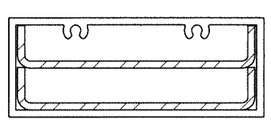

TRANSOM BAR
HORIZONTAL MULLION
WITH REINFORCING

*
SEE SHEET 9 FOR SILL TYPES QUALIFIED
FOR WATER INFILTRATION RESISTANCE
(POSITIVE DESIGN PRESSURE) LIMITED

Sealed: 7/12/2023

JALAL FAROOQ
LICENSE
No. 81223
STATE OF FLORIDA
PROFESSIONAL ENGINEER

FL #17682

AL-FAROOQ CORPORATION
ENGINEERS & PRODUCT DEVELOPMENT
9360 SUNSET DRIVE, SUITE 220
MIAMI, FLORIDA 33173
TEL. (305) 264-8100 FAX. (305) 262-6978
(C.A.N. 3538)

COMP-ANL\21-38F-AAG

SERIES 'SUMMIT' ALUMINUM OUT-SWING DOOR (L.M.I.)

Aldora Aluminum & Glass Products Inc.
4250 Coral Ridge Drive, Suite 101
Coral Springs, FL. 33065
Tel. (954) 784-6900 Fax. (954) 784-6901

revisions:

no	date	by	description

date: 05-04-21
scale: 3/8" = 1"
dr. by: TARIQ
chk. by:

drawing no.
21-38F

DOUBLE DOOR HORIZONTAL MULLION (TRANSOM BAR)

DESIGN LOAD CAPACITY

NOMINAL DIMS.			GLASS E, F, G H, Hi, J, Ji WITHOUT REINF.	GLASS C, D H, Hi, J, Ji WITH REINF.
OPNG. WIDTH INCHES	DOOR OPNG. HEIGHT INCHES	TRANSOM HEIGHT INCHES	*EXT. (+) INT. (−)	*EXT. (+) INT. (−)
72	84	20	100.0	100.0
		24	100.0	100.0
		26	100.0	100.0
		28	100.0	100.0
		32	100.0	100.0
		36	–	100.0
		40	–	100.0
		44	–	91.0
		48	–	83.7
84		20	89.0	100.0
		24	85.7	100.0
		26	84.1	100.0
		28	–	100.0
		32	–	100.0
		36	–	100.0
		40	–	100.0
		44	–	91.0
		48	–	83.7
96		20	67.4	100.0
		24	64.9	100.0
		26	–	100.0
		28	–	100.0
		32	–	100.0
		36	–	100.0
		40	–	100.0
72	96"	20	100.0	100.0
		24	100.0	100.0
		26	100.0	100.0
		28	100.0	100.0
		32	99.6	100.0
		36	–	100.0
		40	–	100.0
		44	–	91.0
		48	–	83.7
84		20	79.8	100.0
		24	77.1	100.0
		26	75.9	100.0
		28	–	100.0
		32	–	100.0
		36	–	100.0
		40	–	100.0
		44	–	91.0
		48	–	83.7
96		20	60.4	100.0
		24	58.4	100.0
		26	–	100.0
		28	–	100.0
		32	–	100.0
		36	–	100.0
		40	–	100.0
		42	–	95.7

DOUBLE DOOR HORIZONTAL MULLION (TRANSOM BAR)

DESIGN LOAD CAPACITY

NOMINAL DIMS.			GLASS E, F, G H, Hi, J, Ji WITHOUT REINF.	GLASS C, D H, Hi, J, Ji WITH REINF.
OPNG. WIDTH INCHES	DOOR OPNG. HEIGHT INCHES	TRANSOM HEIGHT INCHES	*EXT. (+) INT. (−)	*EXT. (+) INT. (−)
72	108	20	99.6	100.0
		24	96.6	100.0
		26	95.2	100.0
		28	93.8	100.0
		32	91.1	100.0
		36	–	100.0
84		20	72.3	100.0
		24	70.1	100.0
		26	69.1	100.0
		28	–	100.0
		32	–	100.0
		36	–	100.0
96		20	54.7	100.0
		24	53.1	100.0
		26	–	100.0
		28	–	100.0
		32	–	97.3
		36	–	94.6
72	118	20	92.4	100.0
		24	89.8	100.0
		26	88.6	100.0
84		20	67.1	100.0
		24	65.2	100.0
		26	64.3	100.0
92		20	53.9	100.0
		24	–	100.0
		26	–	100.0
96		20	50.8	98.7
		24	49.3	95.9
		26	–	94.6
72	120	20	91.1	100.0
		24	88.6	100.0
		26	87.3	100.0
84		20	66.1	100.0
		24	64.3	100.0
		26	63.4	100.0
92		20	53.2	100.0
		24	52.4	100.0
		26	50.0	100.0
96		20	48.6	97.3
		24	48.6	94.6

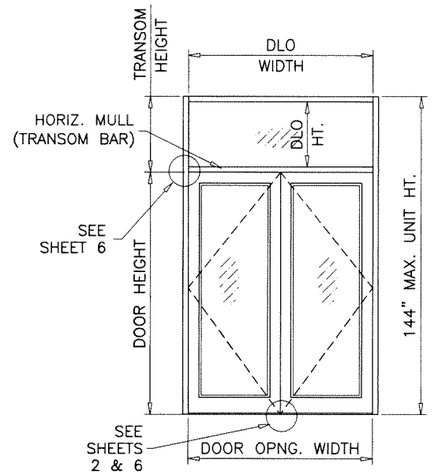

(O/XX)

NOTE:
FOR DOORS CAPACITY SEE SHEETS 3 AND 4.
FOR HORIZONTAL MULLION (TRANSOM BAR) CAPACITY SEE CHART ABOVE.
LOWER VALUES FROM DOORS OR HORIZONTAL MULLION (TRANSOM BAR) CHART WILL APPLY TO ENTIRE SYSTEM.

FOR GLASS TYPES 'J' & 'Ji' MAXIMUM TRANSOM AREA NOT TO EXCEED 16 SQ. FT.

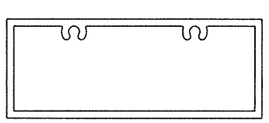

TRANSOM BAR
HORIZONTAL MULLION
WITHOUT REINFORCING

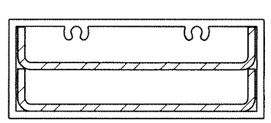

TRANSOM BAR
HORIZONTAL MULLION
WITH REINFORCING

*
SEE SHEET 9 FOR SILL TYPES QUALIFIED
FOR WATER INFILTRATION RESISTANCE
(POSITIVE DESIGN PRESSURE) LIMITED

Sealed: 7/12/2023

FL #17682

JALAL FAROOQ
LICENSE
No. 81223
STATE OF FLORIDA
PROFESSIONAL ENGINEER

AL-FAROOQ CORPORATION
ENGINEERS & PRODUCT DEVELOPMENT
9360 SUNSET DRIVE, SUITE 220
MIAMI, FLORIDA 33173 (C.A.N. 3538)
TEL. (305) 264-8100 FAX. (305) 262-6978

COMP-ANL\21-38F-AAG

SERIES 'SUMMIT' ALUMINUM OUT-SWING DOOR (L.M.I.)

Aldora Aluminum & Glass Products Inc.
4250 Coral Ridge Drive, Suite 101
Coral Springs, FL. 33065
Tel. (954) 784-6900 Fax. (954) 784-6901

revisions:

no	date	by	description

date: 05-04-21
scale: 3/8" = 1"
dr. by: TARIQ
chk. by:

drawing no. 21-38F

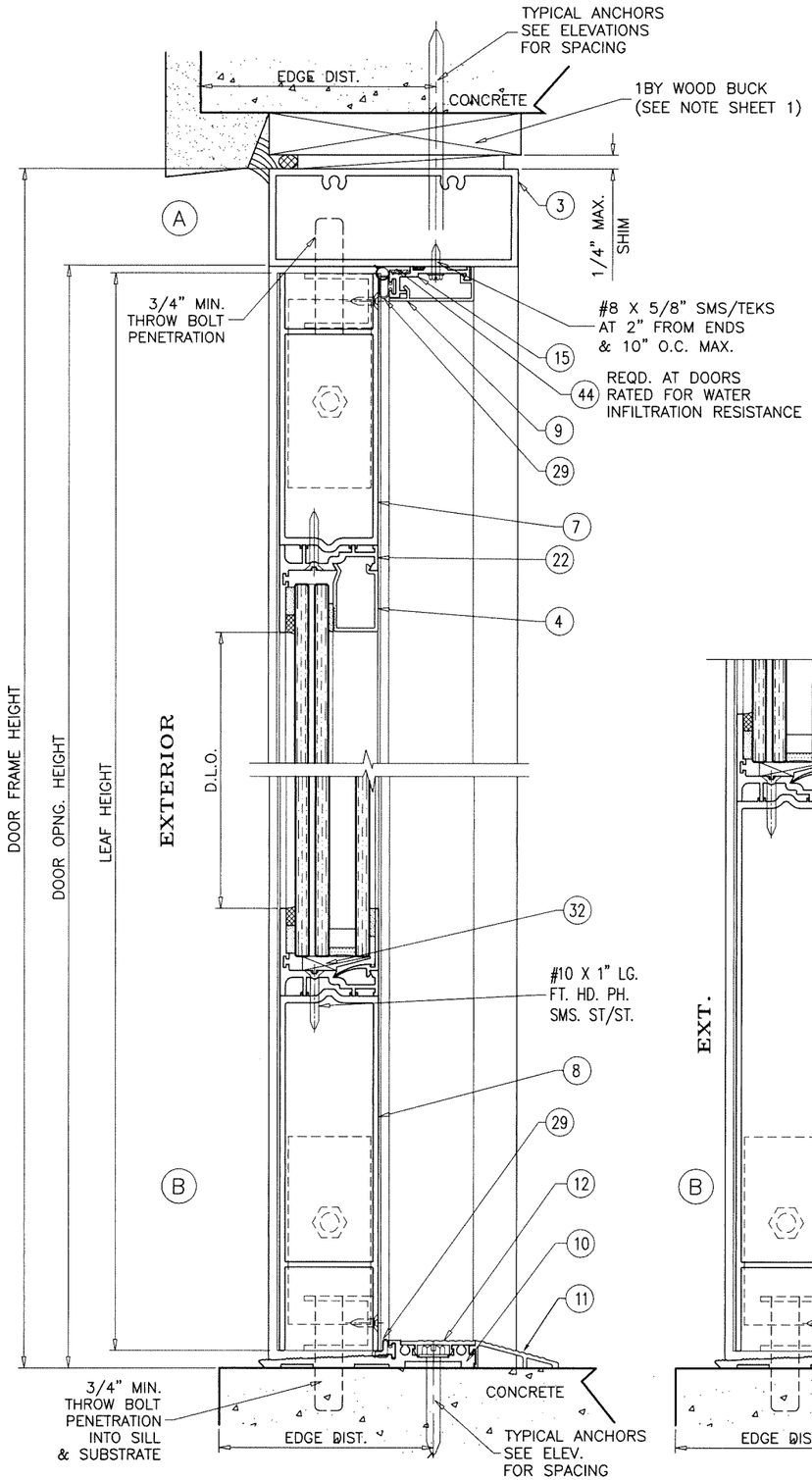

ADA THRESHOLD

NOT APPR'D FOR WATER INFILTRATION RESISTANCE

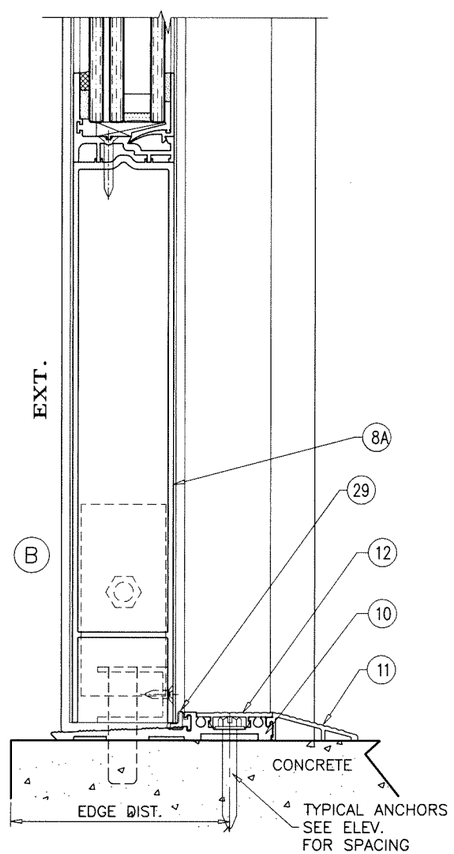

ADA THRESHOLD

NOT APPR'D FOR WATER INFILTRATION RESISTANCE

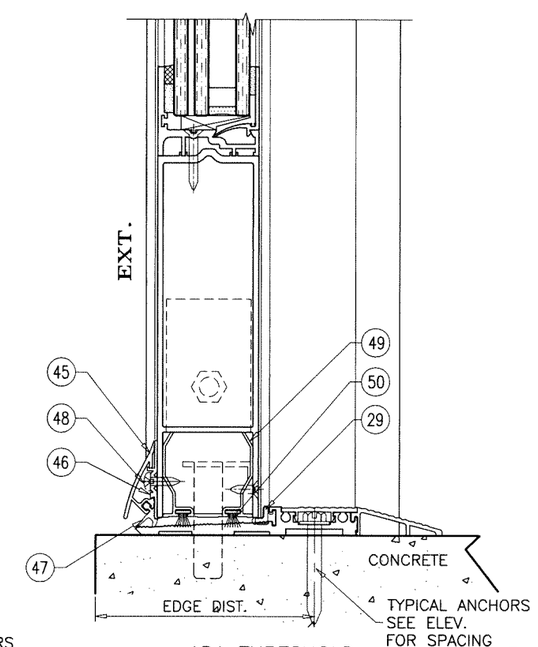

ADA THRESHOLD

APPR'D FOR WATER INFILTRATION RESISTANCE
LIMIT MAX. EXT. LOADS TO +50.0 PSF
NOT APPROVED WITH PANIC EXIT DEVICES
FIELD CONDITIONS MUST BE PRE APPROVED BY 'ALDORA'

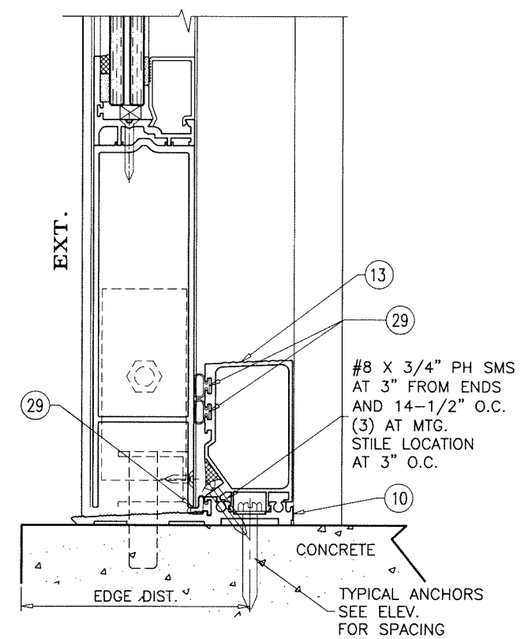

HI-RISE THRESHOLD

APPR'D FOR WATER INFILTRATION RESISTANCE
LIMIT MAX. EXT. LOADS TO +100.0 PSF

Sealed: 7/12/2023

FL #17682

JALAL FAROOQ
LICENSE
No. 81223
STATE OF FLORIDA
PROFESSIONAL ENGINEER

AL-FAROOQ CORPORATION
ENGINEERS & PRODUCT DEVELOPMENT
9360 SUNSET DRIVE, SUITE 220
MIAMI, FLORIDA 33173 (C.A.N. 3538)
TEL. (305) 264-8100 FAX. (305) 262-6978

COMP-ANL\21-38F-AAG

SERIES 'SUMMIT' ALUMINUM OUT-SWING DOOR (L.M.I.)

Aldora Aluminum & Glass Products Inc.
4250 Coral Ridge Drive, Suite 101
Coral Springs, FL. 33065
Tel. (954) 784-6900 Fax. (954) 784-6901

revisions:

no	date	by	description

date: 05-04-21
scale: 3/8" = 1"
dr. by: TARIQ
chk. by:

drawing no. 21-38F

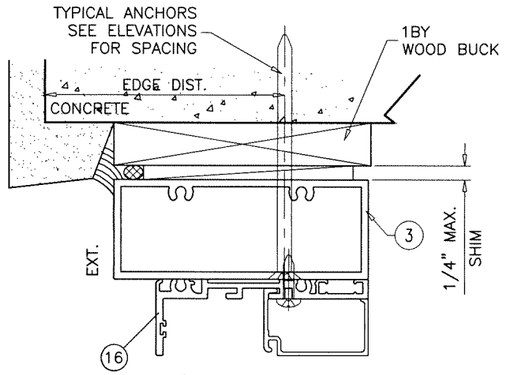

TRANSOM HEADER

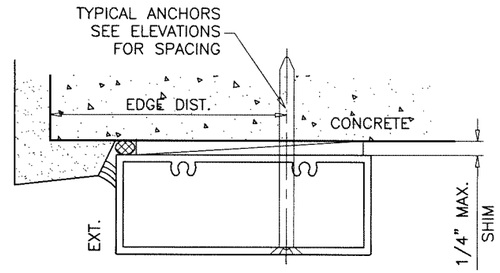

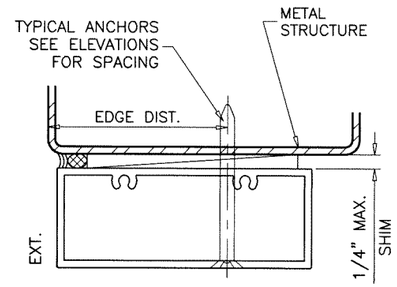

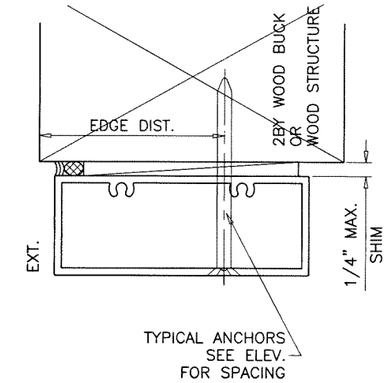

1BY OR 2BY WOOD BUCKS AND METAL STRUCTURE NOT BY 'ALDORA ALUMINUM AND GLASS PRODUCTS' MUST SUSTAIN LOADS IMPOSED BY GLAZING SYSTEM AND TRANSFER THEM TO THE BUILDING STRUCTURE.

TYPICAL ANCHORS: SEE ELEV. FOR SPACING

TYPE 'A'– 1/4" DIA. ULTRACON+ BY 'DEWALT' (Fu=164 KSI, Fy=148 KSI)

INTO 2BY WOOD BUCKS OR WOOD STRUCTURES
1–1/2" MIN. PENETRATION INTO WOOD (HEAD/JAMBS)

THRU 1BY BUCKS INTO CONC. OR BLOCKS
1–1/2" MIN. EMBED INTO CONCRETE (HEAD/JAMBS)
1–1/4" MIN. EMBED INTO BLOCKS (JAMBS)

DIRECTLY INTO BLOCKS
1–3/4" MIN. EMBED INTO GROUT FILLED BLOCKS (JAMBS)

TYPE 'B'– 1/4" DIA. ULTRACON+ BY 'DEWALT' (Fu=164 KSI, Fy=148 KSI)

DIRECTLY INTO CONCRETE
1–1/2" MIN. EMBED INTO CONCRETE (HEAD/SILL/JAMBS)

TYPE 'C'– #14 SMS OR SELF DRILLING SCREWS (GRADE 2 CRS)

INTO F.B.C. APPROVED MULLIONS
OR
INTO METAL STRUCTURES (HEAD/JAMBS)
(3) THREADS MIN. TO EXTEND BEYOND METAL THICKNESS
ALUMINUM: 1/8" THK. MIN. (6063–T5 MIN.)
STEEL: 1/8" THK. MIN. (Fy = 36 KSI MIN.)
(STEEL IN CONTACT WITH ALUMINUM TO BE PLATED OR PAINTED)

TYPICAL EDGE DISTANCE

INTO CONCRETE AND MASONRY = 2–1/2" MIN.
INTO WOOD STRUCTURE = 1" MIN.
INTO METAL STRUCTURE = 3/4" MIN.

TYPICAL CL TO CL SPACING

INTO CONCRETE AND MASONRY = 3" MIN.
INTO WOOD STRUCTURE = 1" MIN.
INTO METAL STRUCTURE = 1" MIN.

WOOD AT HEAD OR JAMBS SG = 0.55 MIN.
CONCRETE AT HEAD, SILL OR JAMBS f'c = 3000 PSI MIN.
C–90 HOLLOW/FILLED BLOCK AT JAMBS f'm = 2000 PSI MIN.

Sealed: 7/12/2023

JALAL FAROOQ
LICENSE
No. 81223
STATE OF FLORIDA
PROFESSIONAL ENGINEER

FL #17682

AL-FAROOQ CORPORATION
ENGINEERS & PRODUCT DEVELOPMENT
9360 SUNSET DRIVE, SUITE 220
MIAMI, FLORIDA 33173 (C.A.N. 3538)
TEL. (305) 264-8100 FAX. (305) 262-6978

COMP–ANL\21–38F–AAG

SERIES 'SUMMIT' ALUMINUM OUT–SWING DOOR (L.M.I.)

Aldora Aluminum & Glass Products Inc.
4250 Coral Ridge Drive, Suite 101
Coral Springs, FL. 33065
Tel. (954) 784–6900 Fax. (954) 784–6901

revisions:

no	date	by	description

date: 05–04–21
scale: 3/8" = 1"
dr. by: TARIQ
chk. by:

drawing no. 21–38F

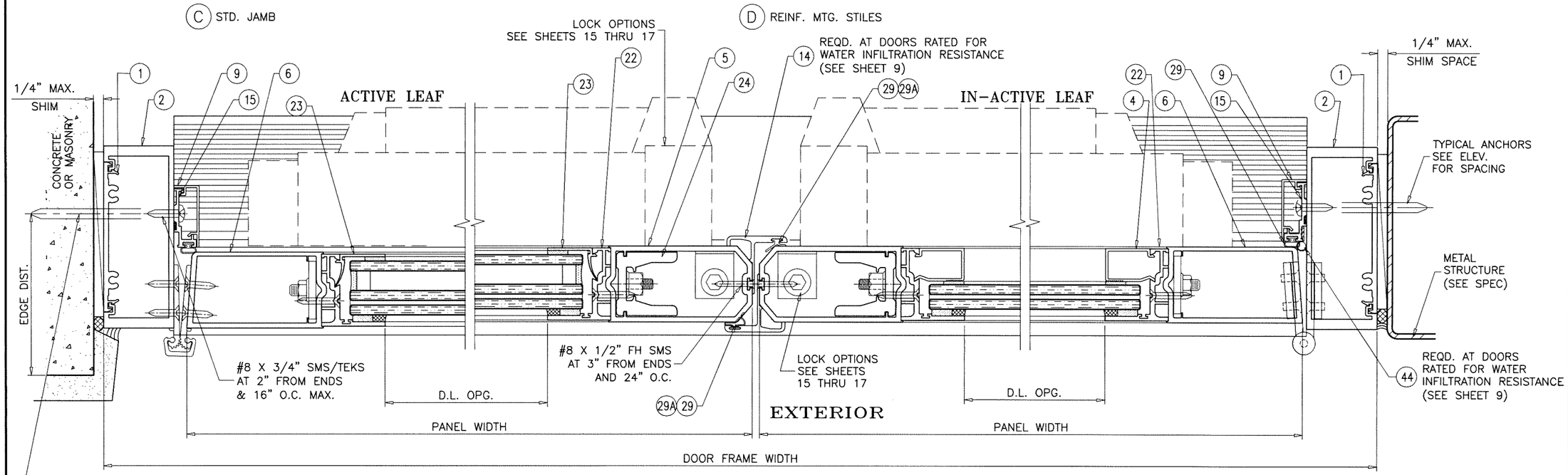

STD. HINGE/ACTIVE/INACTIVE STILES
(RATED FOR LEVEL 'D' & LEVEL 'E' IMPACTS)

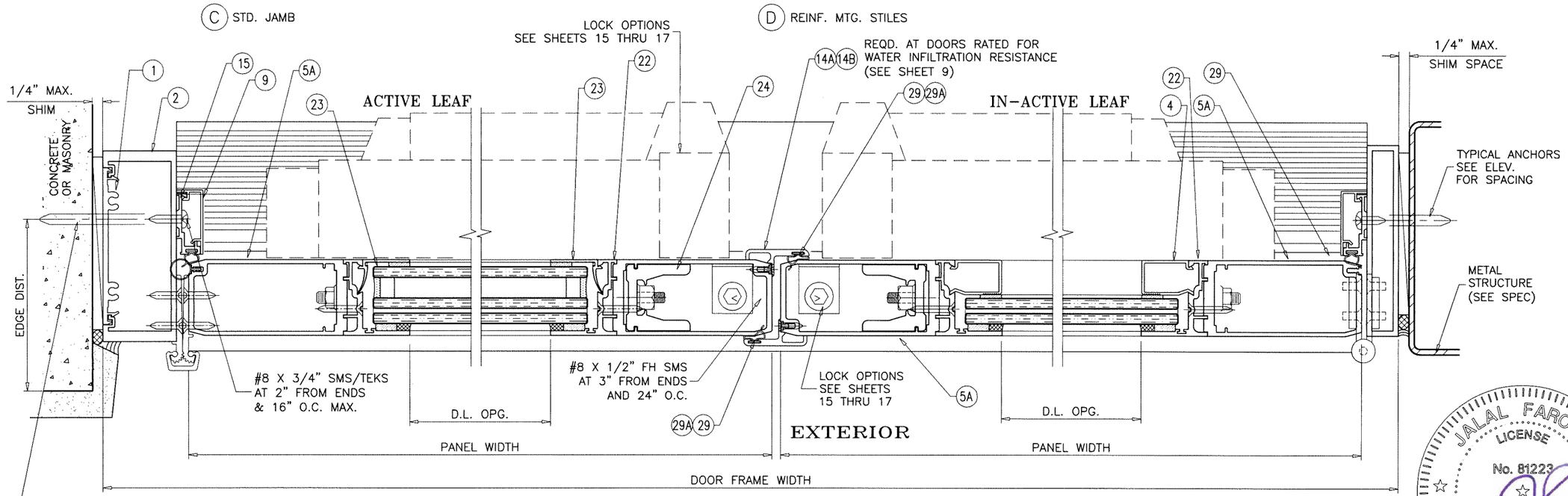

H.D. HINGE/ACTIVE/INACTIVE STILES
(RATED FOR LEVEL 'D' IMPACT ONLY)

Sealed: 7/12/2023

JALAL FAROOQ LICENSE No. 81223 STATE OF FLORIDA PROFESSIONAL ENGINEER

FL #17682

AL-FAROOQ CORPORATION
ENGINEERS & PRODUCT DEVELOPMENT
9360 SUNSET DRIVE, SUITE 220
MIAMI, FLORIDA 33173 (C.A.N. 3538)
TEL. (305) 264-8100 FAX. (305) 262-6978
COMP-ANL\21-38F-AAG

SERIES 'SUMMIT' ALUMINUM OUT-SWING DOOR (L.M.I.)

Aldora Aluminum & Glass Products Inc.
4250 Coral Ridge Drive, Suite 101
Coral Springs, FL. 33065
Tel. (954) 784-6900 Fax. (954) 784-6901

revisions:

no	date	by	description

date: 05-04-21
scale: 3/8" = 1"
dr. by: TARIQ
chk. by:

drawing no. 21-38F

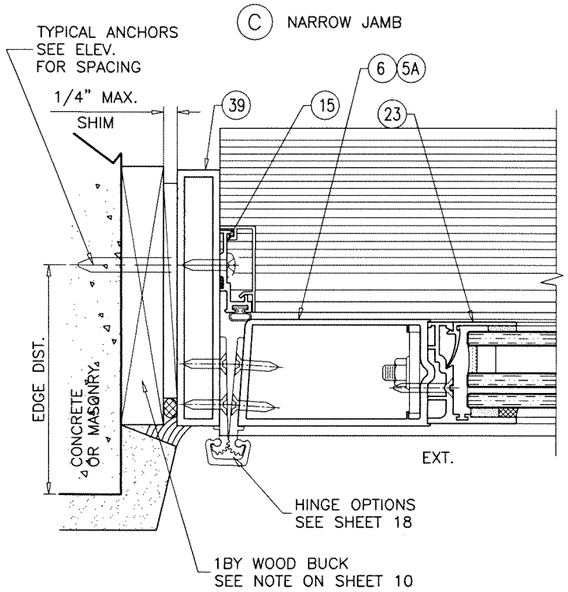

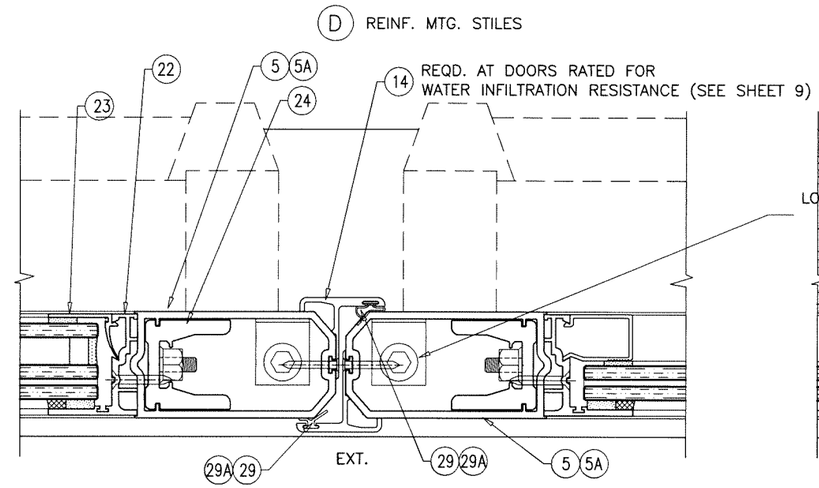

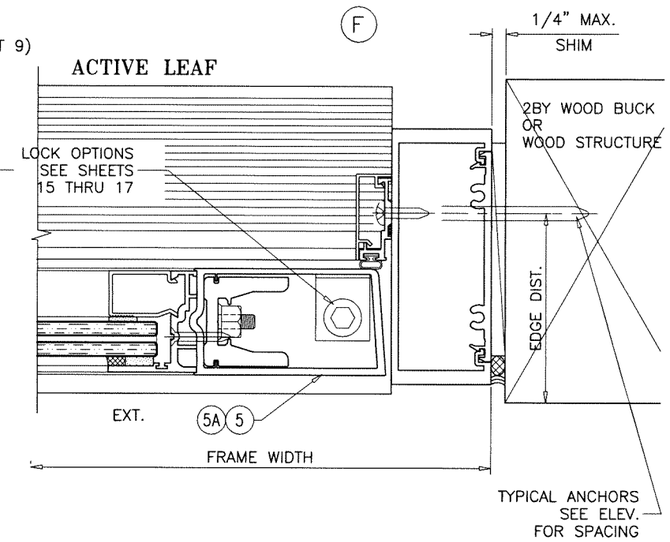

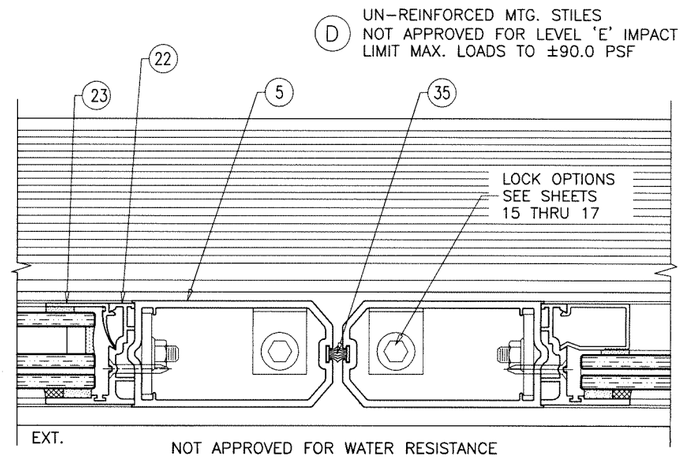

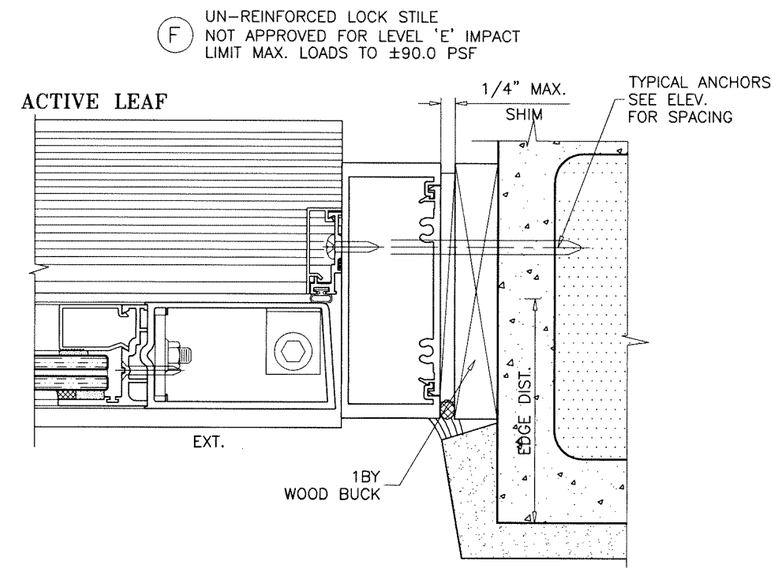

Sealed: 7/12/2023

JALAL FAROOQ LICENSE No. 81223 STATE OF FLORIDA PROFESSIONAL ENGINEER

FL #17682

AL-FAROOQ CORPORATION
ENGINEERS & PRODUCT DEVELOPMENT
9360 SUNSET DRIVE, SUITE 220
MIAMI, FLORIDA 33173 (C.A.N. 3538)
TEL. (305) 264-8100 FAX. (305) 262-6978
COMP-ANL\21-38F-AAG

SERIES 'SUMMIT' ALUMINUM OUT-SWING DOOR (L.M.I.)

Aldora Aluminum & Glass Products Inc.
4250 Coral Ridge Drive, Suite 101
Coral Springs, FL. 33065
Tel. (954) 784-6900 Fax. (954) 784-6901

revisions:

no	date	by	description

date: 05-04-21
scale: 3/8" = 1"
dr. by: TARIQ
chk. by:

drawing no. 21-38F

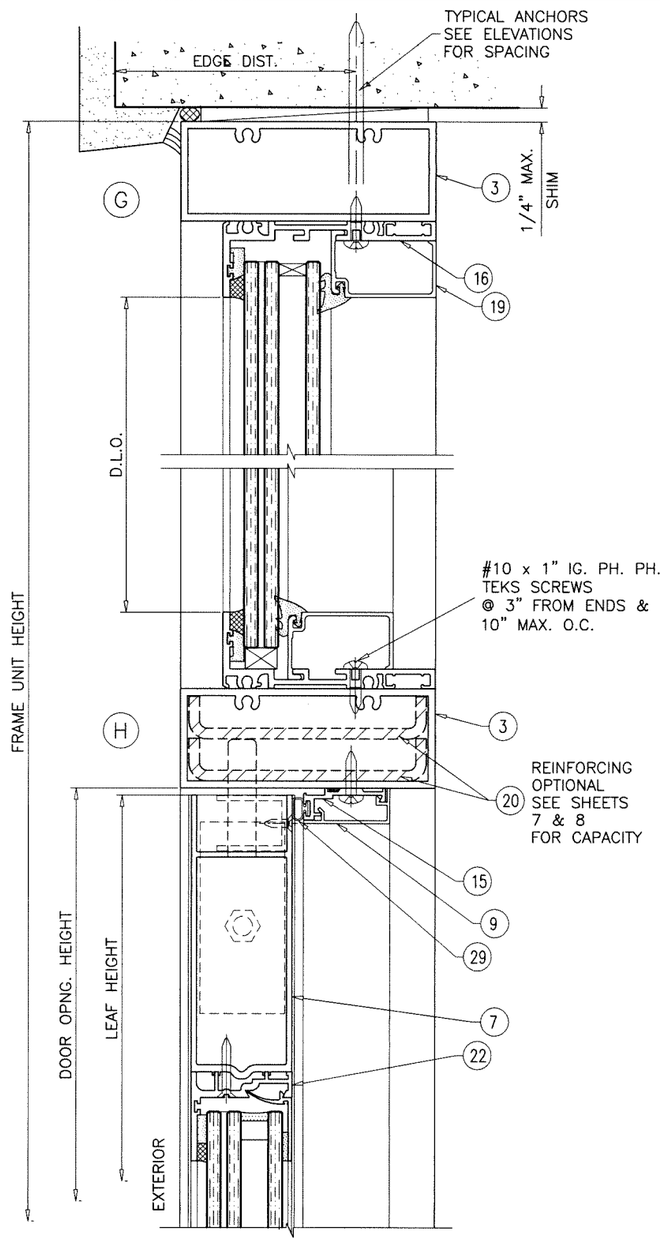

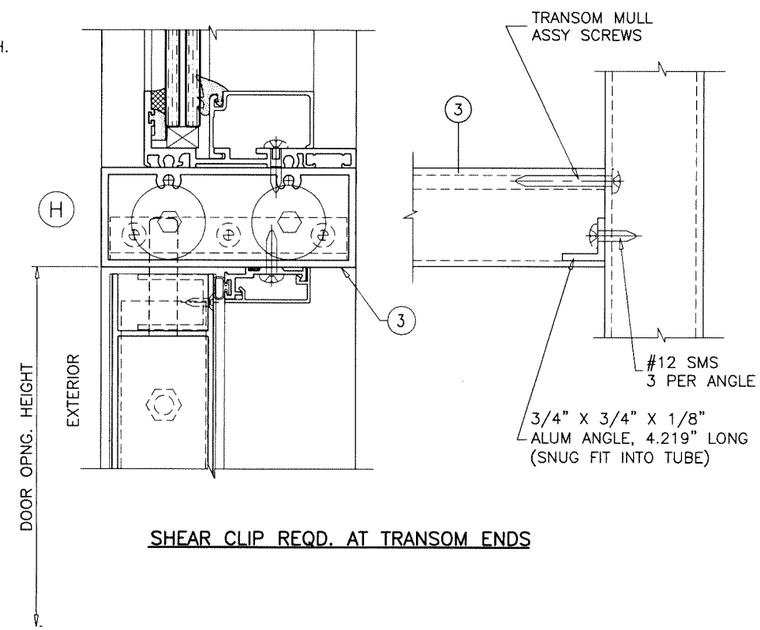

SHEAR CLIP REQD. AT TRANSOM ENDS

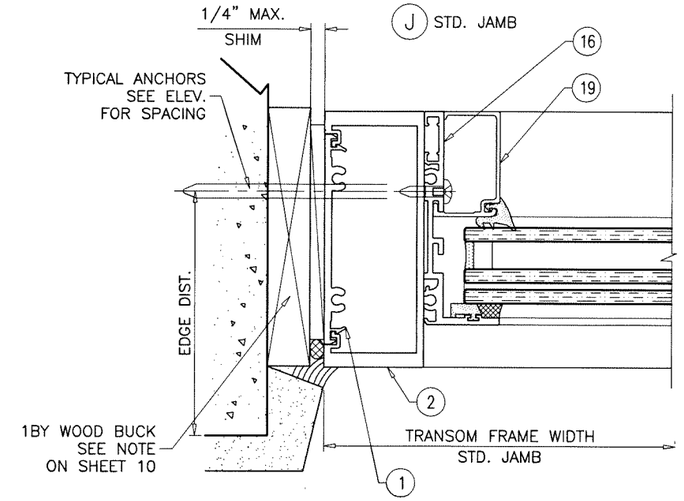

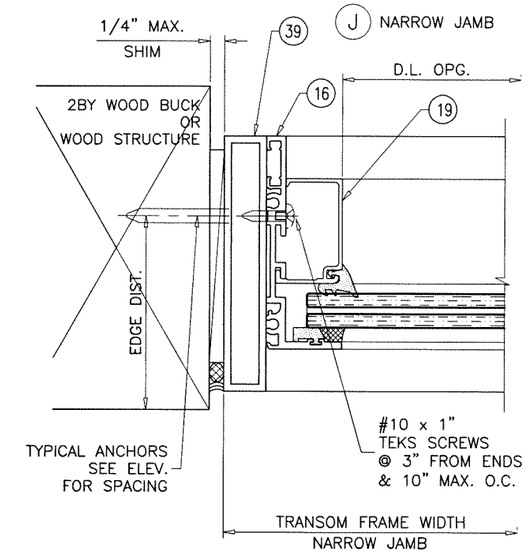

Sealed: 7/12/2023

JALAL FAROOQ
LICENSE
No. 81223
STATE OF FLORIDA
PROFESSIONAL ENGINEER

FL #17682

AL-FAROOQ CORPORATION
ENGINEERS & PRODUCT DEVELOPMENT
9360 SUNSET DRIVE, SUITE 220
MIAMI, FLORIDA 33173 (C.A.N. 3538)
TEL. (305) 264-8100 FAX. (305) 262-6978

COMP-ANL\21-38F-AAG

SERIES 'SUMMIT' ALUMINUM OUT-SWING DOOR (L.M.I.)

Aldora Aluminum & Glass Products Inc.
4250 Coral Ridge Drive, Suite 101
Coral Springs, FL. 33065
Tel. (954) 784-6900 Fax. (954) 784-6901

revisions:

no	date	by	description

date: 05-04-21
scale: 3/8" = 1"
dr. by: TARIQ
chk. by:

drawing no.
21-38F

F.B.C. APPROVED
LARGE MISSILE IMPACT RESISTANT SMI-175
STOREFRONT SYSTEM, SEE SEPARATE
'ALDORA ALUM & GLASS PRODUCTS'
APPROVAL FOR DOOR VERTICAL MULLION CAPACITY

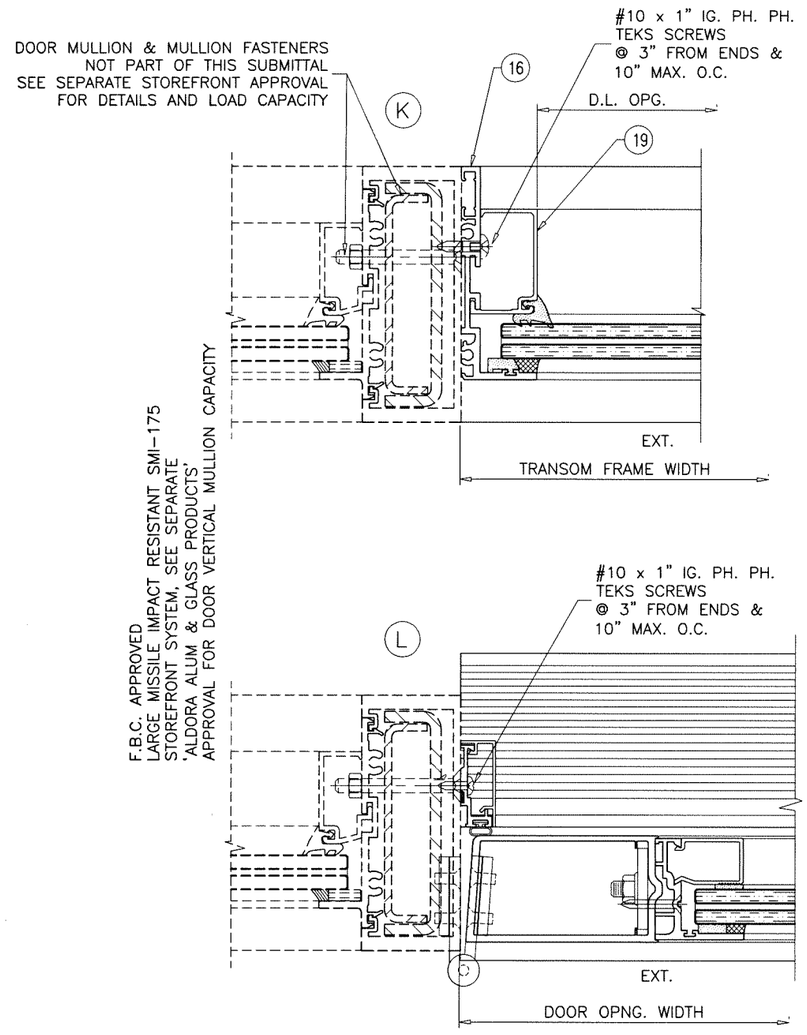

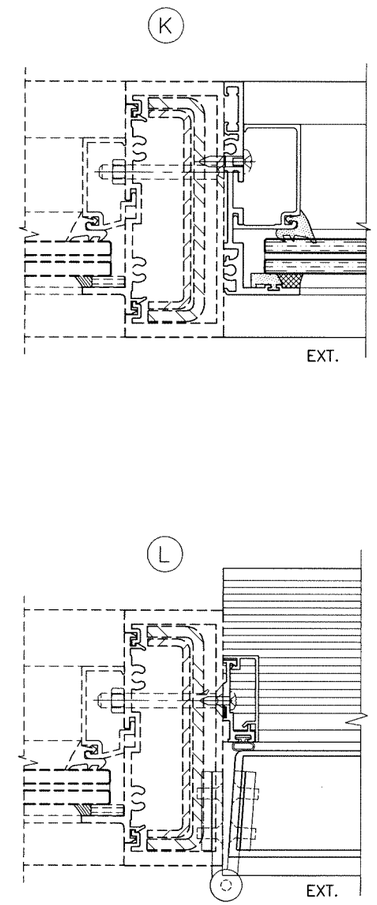

Sealed: 7/12/2023

FL #17682

JALAL FAROOQ
LICENSE
No. 81223
STATE OF FLORIDA
PROFESSIONAL ENGINEER

AL-FAROOQ CORPORATION
ENGINEERS & PRODUCT DEVELOPMENT
9360 SUNSET DRIVE, SUITE 220
MIAMI, FLORIDA 33173 (C.A.N. 3538)
TEL. (305) 264-8100 FAX. (305) 262-6978
COMP-ANL\21-38F-AAG

SERIES 'SUMMIT' ALUMINUM OUT-SWING DOOR (L.M.I.)

Aldora Aluminum & Glass Products Inc.
4250 Coral Ridge Drive, Suite 101
Coral Springs, FL. 33065
Tel. (954) 784-6900 Fax. (954) 784-6901

revisions:

no	date	by	description

date: 05-04-21
scale: 3/8" = 1"
dr. by: TARIQ
chk. by:

drawing no.
21-38F

sheet 14 of 22

LOCK OPTIONS:

OPTION #1:

STD. 3 POINT LOCK
MAX. FRAME HEIGHT = 120 IN.
MAX. LEAF WIDTH = 47-3/4 IN.
MAX. DESIGN LOAD = 100 PSF

ACTIVE LEAF:

THREE POINT LOCK SYSTEM SERIES 2002/2222/2062
BY 'REGENT HARDWARE'
KEY OPERATED FROM EXTERIOR AND THUMB TURN
ON INTERIOR WITH CONCEALED FLUSH BOLTS
AT TOP & BOTTOM OF LOCK STILE
LOCATED AT 34" FROM BOTTOM OF LEAF

INACTIVE LEAF:

MANUALLY OPERATED TWO POINT LOCK SYSTEM BY
'REGENT HARDWARE' WITH CONCEALED FLUSH BOLTS
AT TOP & BOTTOM OF LOCK STILE
FASTENED WITH
(2) #8-32 X 1/4" PH MACHINE SCREWS

OPTION #1A:

STD. 3 POINT LOCK
MAX. FRAME HEIGHT = 120 IN.
MAX. LEAF WIDTH = 47-3/4 IN.
MAX. DESIGN LOAD = 100 PSF

ACTIVE LEAF:

THREE POINT LOCK SYSTEM BY 'INTERLOCK'
KEY OPERATED FROM EXTERIOR AND THUMB TURN
ON INTERIOR WITH CONCEALED FLUSH BOLTS
AT TOP & BOTTOM OF LOCK STILE
LOCATED AT 34" FROM BOTTOM OF LEAF
FASTENED WITH
(2) #8-32 X 2" OH MACHINE SCREWS

INACTIVE LEAF:

TWO POINT LOCK SYSTEM BY 'INTERLOCK'
WITH CONCEALED FLUSH BOLTS
AT TOP & BOTTOM OF LOCK STILE
FASTENED WITH
(2) #8-32 X 2" OH MACHINE SCREWS

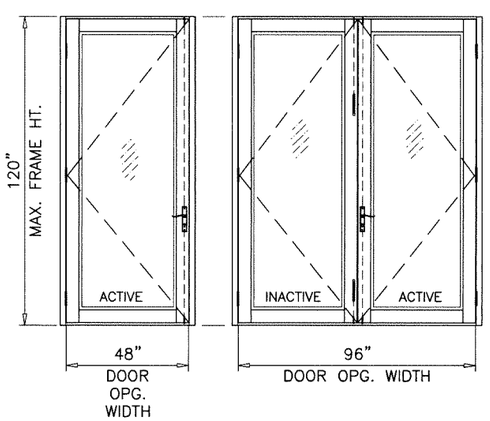

OPTION #2:

STD. 3 POINT LOCK
MAX. FRAME HEIGHT = 120 IN.
MAX. LEAF WIDTH = 47-3/4 IN.
MAX. DESIGN LOAD = 100 PSF

ACTIVE LEAF:

THREE POINT LOCK SYSTEM WITH 4 PLY
HOOK LOCK REGENT NO. 206-3P,
KEY OPERATED ON EXTERIOR AND THUMB-TURN ON
INTERIOR, LOCATED AT 36" FROM BOTTOM OF PANEL

INACTIVE LEAF:

TWO POINT LOCK SYSTEM SULLIVAN CH 103 WITH
THUMB TURN ON THE INTERIOR, LOCATED AT 36"
FROM BOTTOM OF PANEL

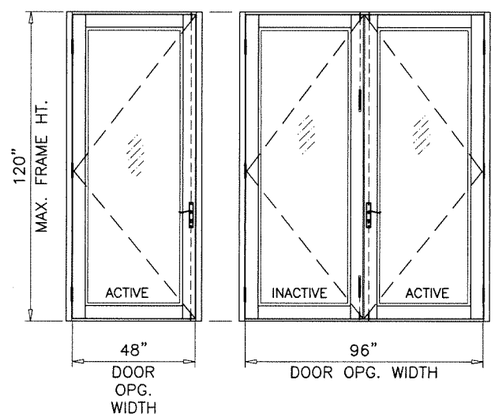

OPTION #3:

STD. 3 POINT LOCK
MAX. FRAME HEIGHT = 120 IN.
MAX. LEAF WIDTH = 47-3/4 IN.
MAX. DESIGN LOAD = 100 PSF

ACTIVE LEAF:

KEY OPERATED THREE POINT LOCK SYSTEM BY
'MDC' WITH CONCEALED FLUSH BOLTS AT TOP &
BOTTOM OF LOCK STILE AND A THUMB TURN ON THE
INTERIOR, LOCATED AT 36" FROM BOTTOM OF PANEL
FASTENED WITH
(2) #10-24 X 1/2" FH MS AND
(1) #10-32 X 1-3/4" FH MS

INACTIVE LEAF:

MANUALLY OPERATED TWO POINT LOCK SYSTEM BY
'MDC' WITH CONCEALED FLUSH BOLTS AT TOP &
BOTTOM OF LOCK STILE
FASTENED WITH
(2) #6-32 X 1/2" PH MACHINE SCREWS

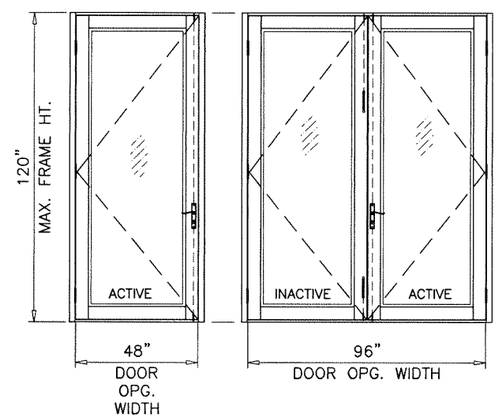

OPTION #4:

STD. 3 POINT LOCK
MAX. FRAME HEIGHT = 98 IN.
MAX. LEAF WIDTH = 36 IN.
MAX. DESIGN LOAD = 90 PSF

ACTIVE LEAF:

KEY OPERATED THREE POINT LOCK SYSTEM BY
'ADAMS RITE' WITH CONCEALED FLUSH BOLTS AT TOP &
BOTTOM OF LOCK STILE AND A THUMB TURN ON THE
INTERIOR, LOCATED AT 40" FROM BOTTOM OF PANEL
FASTENED WITH
(2) #12-24 X 1/2" FH MACHINE SCREWS

INACTIVE LEAF:

MANUALLY OPERATED TWO POINT LOCK SYSTEM BY
'ADAMS RITE' WITH CONCEALED FLUSH BOLTS AT TOP &
BOTTOM OF LOCK STILE
FASTENED WITH
(2) #8-32 X 1/4" PH MACHINE SCREWS

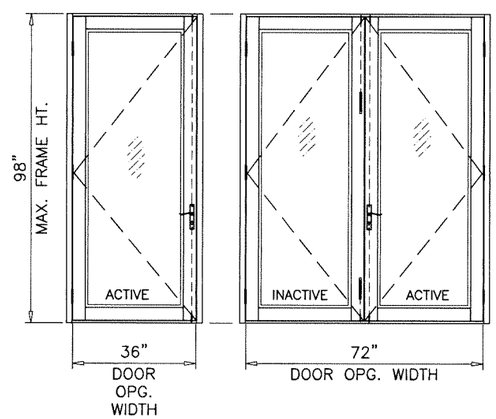

Sealed: 7/12/2023

JALAL FAROOQ
LICENSE
No. 81223
STATE OF FLORIDA
PROFESSIONAL ENGINEER

FL #17682

AL-FAROOQ CORPORATION
ENGINEERS & PRODUCT DEVELOPMENT
9360 SUNSET DRIVE, SUITE 220
MIAMI, FLORIDA 33173 (C.A.N. 3538)
TEL. (305) 264-8100 FAX. (305) 262-6978

COMP-ANL\21-38F-AAG

SERIES 'SUMMIT' ALUMINUM OUT-SWING DOOR (L.M.I.)

Aldora Aluminum & Glass Products Inc.
4250 Coral Ridge Drive, Suite 101
Coral Springs, FL. 33065
Tel. (954) 784-6900 Fax. (954) 784-6901

revisions:

no	date	by	description

date: 05-04-21
scale: -
dr. by: TARIQ
chk. by:

drawing no. 21-38F

LOCK OPTIONS:
PANIC EXIT DEVICE

OPTION #5:

PANIC EXIT DEVICE
MAX. FRAME HEIGHT = 98 IN.
MAX. LEAF WIDTH = 36 IN.
MAX. DESIGN LOAD = 90 PSF

PANIC EXIT DEVICE
MAX. FRAME HEIGHT = 85 3/4 IN.
MAX. LEAF WIDTH = 47-3/4 IN.
MAX. DESIGN LOAD = 90 PSF

ACTIVE & INACTIVE LEAF:

CONCEALED VERTICAL ROD PANIC EXIT DEVICE SERIES 3347
BY 'VON DUPRIN' LOCATED AT 40" FROM SILL
AT EACH LEAF.
FASTENED WITH
(2) #10-32 X 3/4" FH MACHINE SCREWS AT ONE END AND
(2) #10-24 X 1/2" FH MACHINE SCREWS AT OTHER END

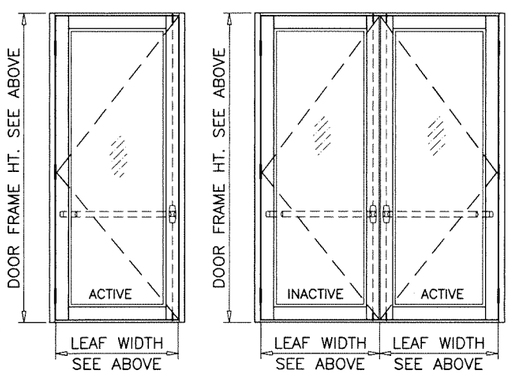

EXTERIOR ELEVS.

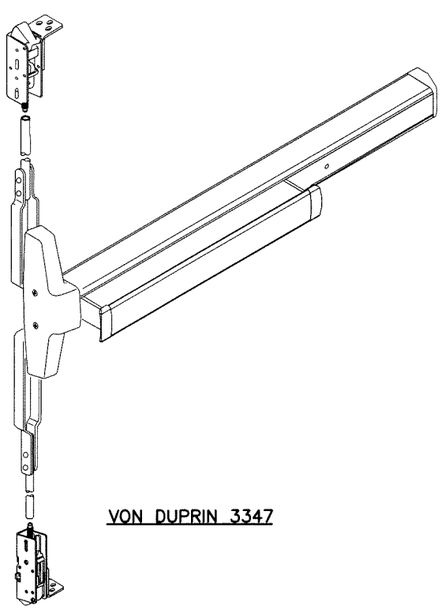

VON DUPRIN 3347

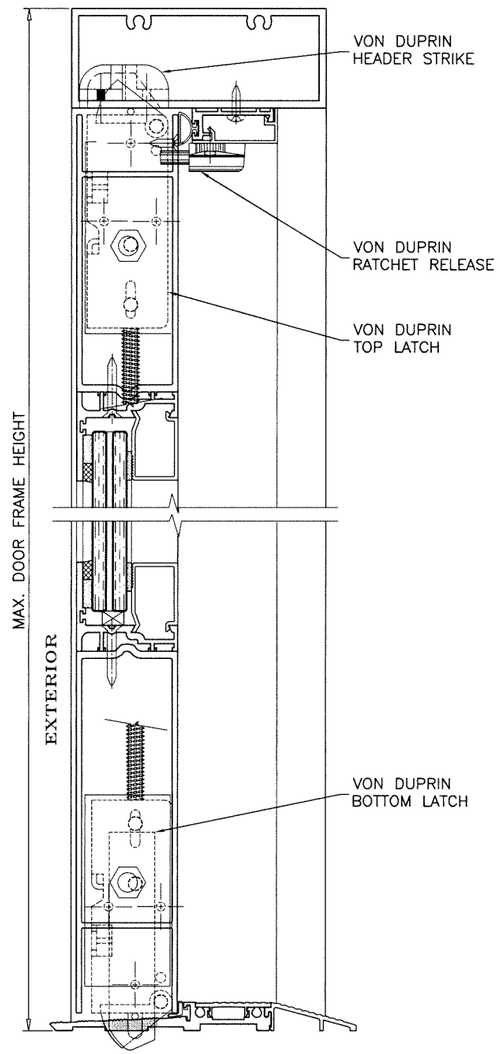

CONCRETE TO BE DRILLED OUT
FOR PANIC LATCHES AT SILL

PANIC EXIT DEVICE

OPTION #6:

PANIC EXIT DEVICE
MAX. FRAME HEIGHT = 120 IN.
MAX. LEAF WIDTH = 47-3/4 IN.
MAX. DESIGN LOAD = 100 PSF

ACTIVE & INACTIVE LEAF:

CONCEALED VERTICAL ROD PANIC EXIT DEVICE # 5770 BY
'REGENT HARDWARE' LOCATED AT 40"
FROM SILL AT EACH LEAF.
FASTENED WITH
(1) #10 X 3/8" FH SELF DRILLING SCREW AT ONE END AND
(2) #10 X 1/2" FH SELF DRILLING SCREWS AT OTHER END

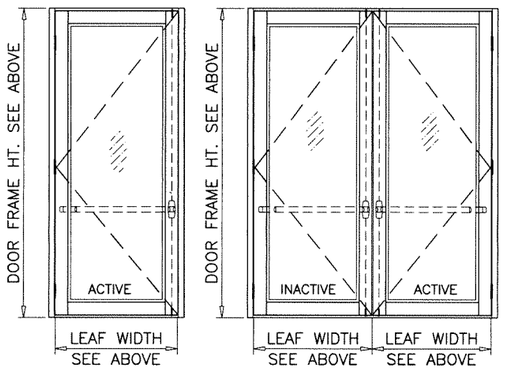

EXTERIOR ELEVS.

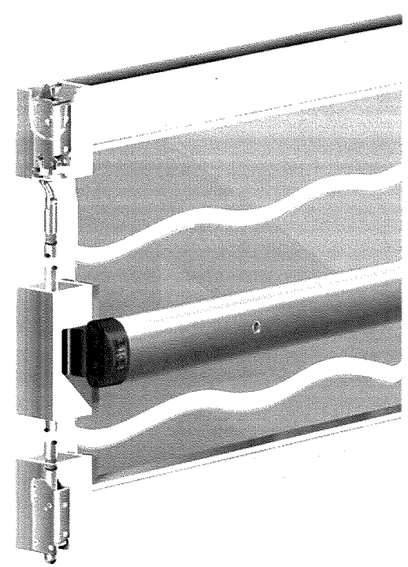

REGENT 5770

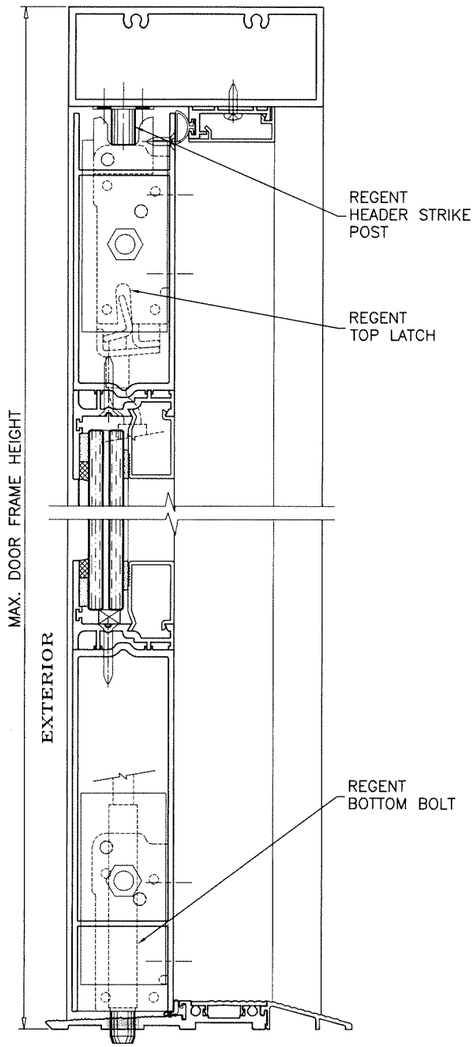

Sealed: 7/12/2023

JALAL FAROOQ
LICENSE
No. 81223
STATE OF FLORIDA
PROFESSIONAL ENGINEER

FL #17682

AL-FAROOQ CORPORATION
ENGINEERS & PRODUCT DEVELOPMENT
9360 SUNSET DRIVE, SUITE 220
MIAMI, FLORIDA 33173 (C.A.N. 3538)
TEL. (305) 264-8100 FAX. (305) 262-6978

COMP-ANL\21-38F-AAG

SERIES 'SUMMIT' ALUMINUM OUT-SWING DOOR (L.M.I.)

Aldora Aluminum & Glass Products Inc.
4250 Coral Ridge Drive, Suite 101
Coral Springs, FL. 33065
Tel. (954) 784-6900 Fax. (954) 784-6901

revisions:			
no	date	by	description

date: 05-04-21
scale: -
dr. by: TARIQ
chk. by:

drawing no. 21-38F

LOCK OPTIONS:
PANIC EXIT DEVICE

OPTION #7:

PANIC EXIT DEVICE
MAX. FRAME HEIGHT = 120 IN.
MAX. LEAF WIDTH = 47-3/4 IN.
MAX. DESIGN LOAD = 100 PSF

ACTIVE & INACTIVE LEAF:

CONCEALED VERTICAL ROD PANIC EXIT DEVICE SERIES 8400 BY 'SARGENT ASSA ABLOY' LOCATED AT 40" FROM SILL AT EACH LEAF.
FASTENED WITH
(2) #12 X 1" HH SELF DRILLING SCREW AT ONE END AND
(2) #14 X 3/4" PH SELF DRILLING SCREWS AT OTHER END

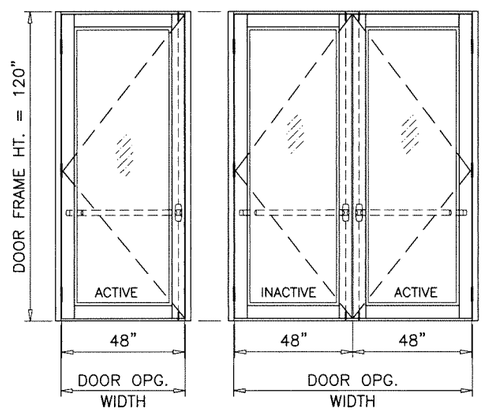

OPTION #8:

PANIC EXIT DEVICE
MAX. FRAME HEIGHT = 120 IN.
MAX. LEAF WIDTH = 47-3/4 IN.
MAX. DESIGN LOAD = 100 PSF

ACTIVE & INACTIVE LEAF:

CONCEALED VERTICAL ROD PANIC EXIT DEVICE # G86 BY 'ADAMS RITE' LOCATED AT 40" FROM SILL AT EACH LEAF.
FASTENED WITH
(2) #10-32 X 3/4" FH MACHINE SCREWS AT ONE END AND
(2) #10-24 X 1/2" FH MACHINE SCREWS AT OTHER END

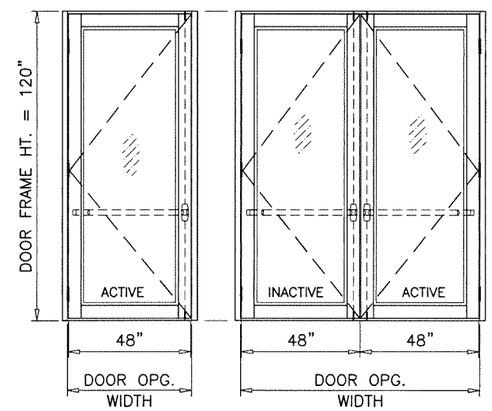

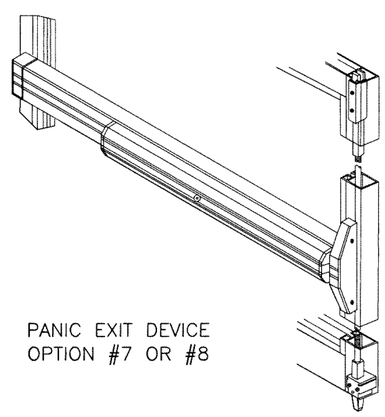

PANIC EXIT DEVICE
OPTION #7 OR #8

Sealed: 7/12/2023

JALAL FAROOQ
LICENSE
No. 81223
STATE OF FLORIDA
PROFESSIONAL ENGINEER

FL #17682

AL-FAROOQ CORPORATION
ENGINEERS & PRODUCT DEVELOPMENT
9360 SUNSET DRIVE, SUITE 220
MIAMI, FLORIDA 33173 (C.A.N. 3538)
TEL. (305) 264-8100 FAX. (305) 262-6978

COMP-ANL\21-38F-AAG

SERIES 'SUMMIT' ALUMINUM OUT-SWING DOOR (L.M.I.)

Aldora Aluminum & Glass Products Inc.
4250 Coral Ridge Drive, Suite 101
Coral Springs, FL. 33065
Tel. (954) 784-6900 Fax. (954) 784-6901

revisions:

no	date	by	description

date: 05-04-21
scale: -
dr. by: TARIQ
chk. by:

drawing no. 21-38F

DOOR FRAME NOT SHOWN FOR CLARITY

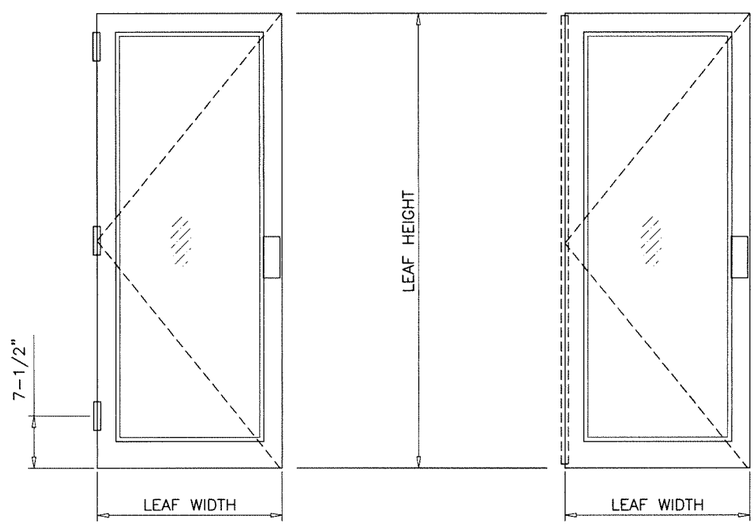

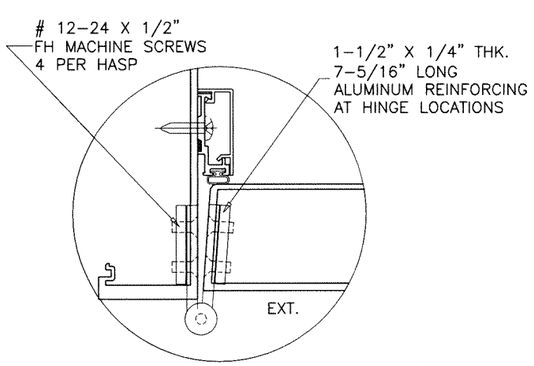

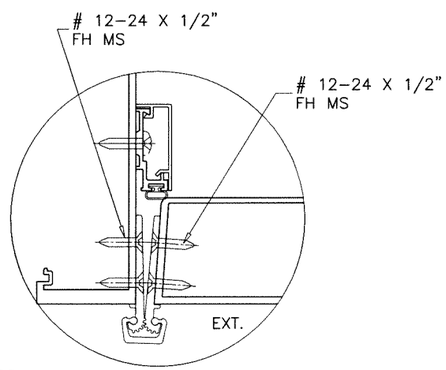

HINGE OPTIONS:

BUTT HINGES

4-1/2" LONG BUTT HINGES REGENT #4001
OR IDH #B10445R ST/ST
(3) PER LEAF, 7-1/2" FROM TOP AND BOTTOM
AND AT MIDSPAN
FASTENED TO FRAME JAMB WITH
(4) #12-24 X 1/2" FH MS
AND TO LEAF STILE WITH
(4) #12-24 X 1/2" FH MS

SURFACE MOUNT GEARED HINGE

CONTINUOUS ALUMINUM GEARED HINGE
PEMKO FM-SLI
FASTENED TO FRAME JAMB AND TO JAMB STILE
WITH (22) #12-24 X 1/2" FH MS SCREWS

Sealed: 7/12/2023

JALAL FAROOQ
LICENSE
No. 81223
STATE OF FLORIDA
PROFESSIONAL ENGINEER

FL #17682

AL-FAROOQ CORPORATION
ENGINEERS & PRODUCT DEVELOPMENT
9360 SUNSET DRIVE, SUITE 220
MIAMI, FLORIDA 33173 (C.A.N. 3538)
TEL. (305) 264-8100 FAX. (305) 262-6978

COMP-ANL\21-38F-AAG

SERIES 'SUMMIT' ALUMINUM OUT-SWING DOOR (L.M.I.)

Aldora Aluminum & Glass Products Inc.
4250 Coral Ridge Drive, Suite 101
Coral Springs, FL. 33065
Tel. (954) 784-6900 Fax. (954) 784-6901

revisions:

no	date	by	description

date: 05-04-21
scale: 3/8" = 1"
dr. by: TARIQ
chk. by:

drawing no. 21-38F

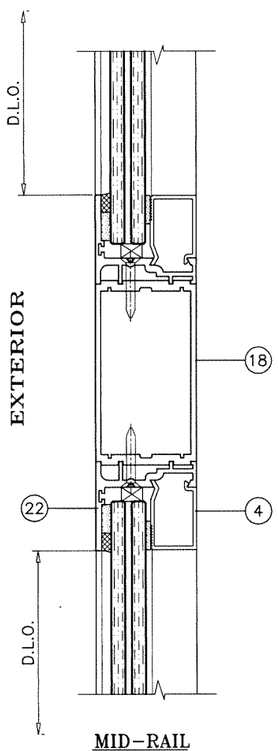

MID-RAIL
OPTIONAL

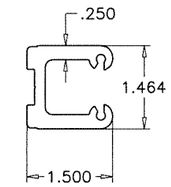

18A MID-RAIL CORNER CLIP

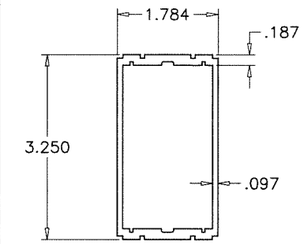

18 MID-RAIL

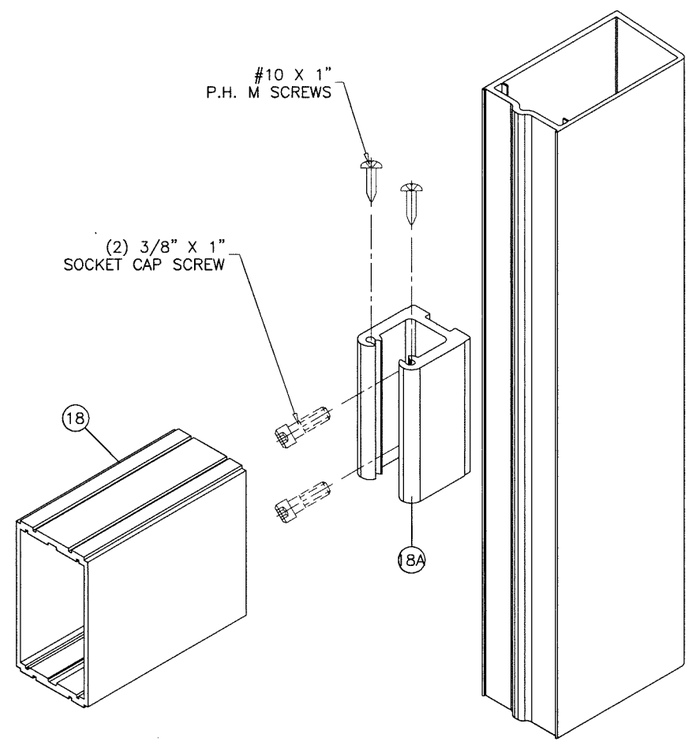

MID-RAIL CORNER

Sealed: 7/12/2023

JALAL FAROOQ
LICENSE
No. 81223
STATE OF FLORIDA
PROFESSIONAL ENGINEER

FL #17682

AL-FAROOQ CORPORATION
ENGINEERS & PRODUCT DEVELOPMENT
9360 SUNSET DRIVE, SUITE 220
MIAMI, FLORIDA 33173 (C.A.N. 3538)
TEL. (305) 264-8100 FAX. (305) 262-6978

COMP-ANL\21-38F-AAG

SERIES 'SUMMIT' ALUMINUM OUT-SWING DOOR (L.M.I.)

Aldora Aluminum & Glass Products Inc.
4250 Coral Ridge Drive, Suite 101
Coral Springs, FL. 33065
Tel. (954) 784-6900 Fax. (954) 784-6901

revisions:			
no.	date	by	description

date: 05-04-21
scale: 3/8" = 1"
dr. by: TARIQ
chk. by:

drawing no. 21-38F

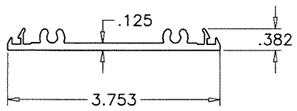

1 SMI-004
PLAIN SNAP

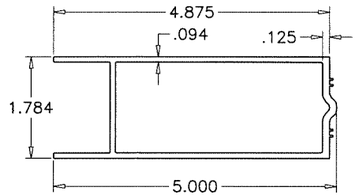

7 SMI-012
TOP RAIL

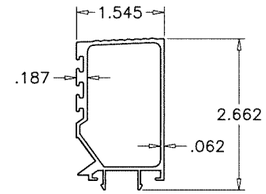

13 SMI-039
HI RISE THRESHOLD COVER

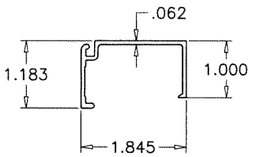

19 SMI-092
GLASS STOP.

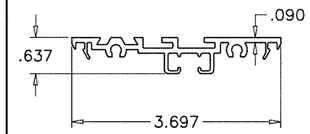

21 SMI-094
PLAIN SNAP.

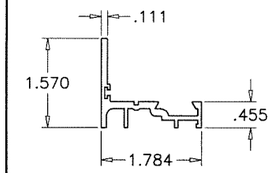

22 SMI-096
DOOR SASH BASE

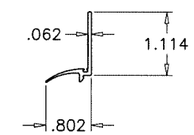

23 SMI-097
DOOR SASH STOP

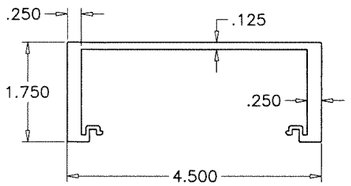

2 SMI-005
FRAME JAMB

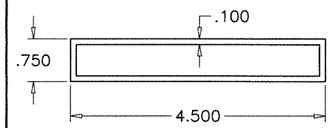

39 SMI-043
FRAME JAMB

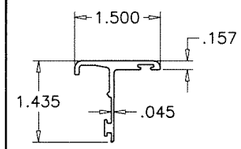

14 SMI-058
ASTRAGAL

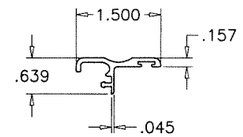

14A SMI-083
ASTRAGAL

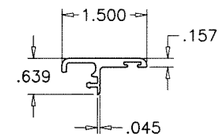

14B SMI-084
ASTRAGAL

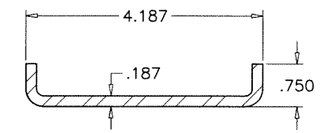

20 REINFORCING CHANNEL
A36 STEEL

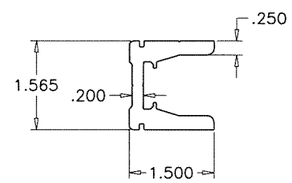

24 SMI-051
DOOR STILE REINF.

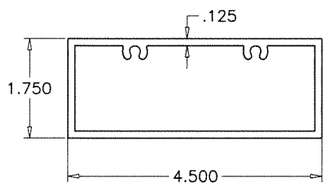

3 SMI-006
FRAME HEAD/TRANSOM BAR

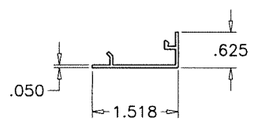

9 SMI-015
DOOR STOP COVER

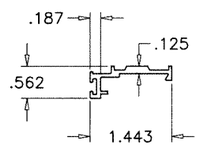

15 SMI-044
DOOR STOP BASE

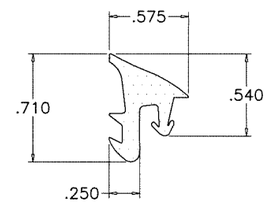

HARDNESS = 72±5 SHORE A
TENSILE STRENGTH (100% STRAIN)= 1200 PSI
TENSILE STRENGTH (BREAK)= 1450 PSI
ELONGATION AT BREAK = 300%
TEAR STRENGTH = 150 LBF/IN
SPECIFIC GRAVITY = 1.20

25 TRANSOM EPDM GASKET
SCALE 1:1

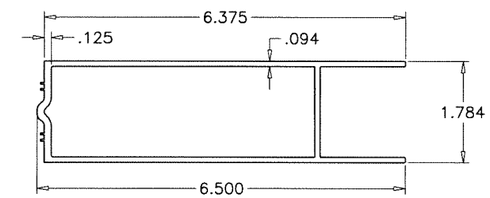

8 SMI-013
STD. BOTTOM RAIL

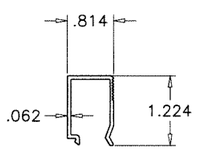

4 SMI-008
DOOR SASH STOP

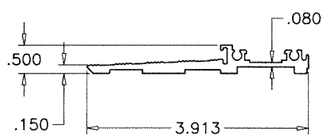

10 SMI-036
THRESHOLD BASE

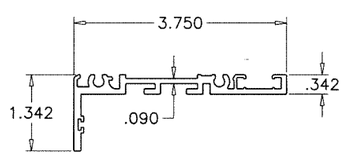

16 SMI-PW001
TRANSOM ADAPTER

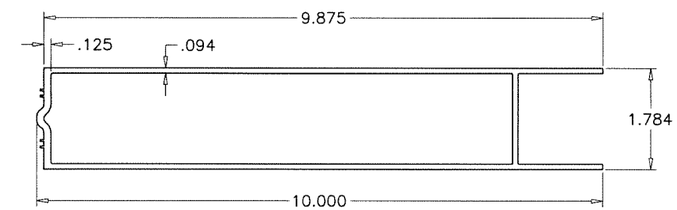

8A SMI-065
HI-PROFILE BOTTOM RAIL

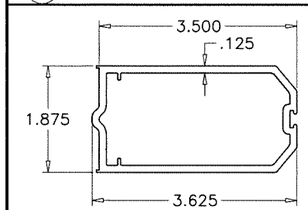

5 SMI-009
STD. ACTIVE/INACTIVE STILE

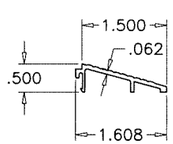

11 SMI-037
THRESHOLD RAMP ADAPTER

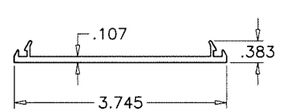

17 SMI-090001
PLAIN SNAP

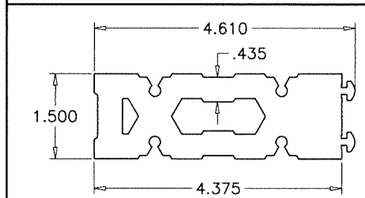

40 SMI-71
CORNER KEY MALE

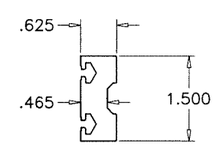

41 SMI-70
CORNER KEY FEMALE

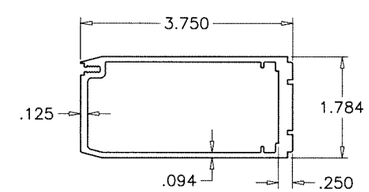

5A SMI-081
H.D. HINGE/ACTIVE/INACTIVE STILE

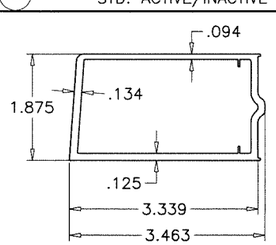

6 SMI-011
STD. HINGE STILE

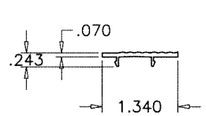

12 SMI-038
ADA THRESHOLD COVER

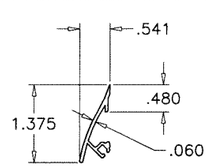

45 SMI-074
DOOR SWEEP COVER

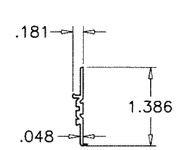

46 SMI-075
DOOR SWEEP BASE

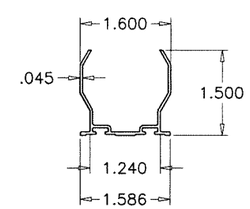

49 SMI-068
DOOR RAIL COVER

Sealed: 7/12/2023

FL #17682

JALAL FAROOQ
LICENSE
No. 81223
STATE OF FLORIDA
PROFESSIONAL ENGINEER

AL-FAROOQ CORPORATION
ENGINEERS & PRODUCT DEVELOPMENT
9360 SUNSET DRIVE, SUITE 220
MIAMI, FLORIDA 33173 (C.A.N. 3538)
TEL. (305) 264-8100 FAX. (305) 262-6978

COMP-ANL\21-38F-AAG

SERIES 'SUMMIT' ALUMINUM OUT-SWING DOOR (L.M.I.)

Aldora Aluminum & Glass Products Inc.
4250 Coral Ridge Drive, Suite 101
Coral Springs, FL. 33065
Tel. (954) 784-6900 Fax. (954) 784-6901

revisions:

no	date	by	description

date: 05-04-21
scale: 3/8" = 1"
dr. by: TARIQ
chk. by:

drawing no. 21-38F

ITEM #	PART #	REQ'D	DESCRIPTION	MATERIAL	MANF./SUPPLIER/REMARKS
1	SMI-004	AS REQ'D	PLAIN SNAP	6063-T6	-
2	SMI-005	AS REQ'D	FRAME JAMB	6063-T6	-
3	SMI-006	AS REQ'D	FRAME HEAD/TRANSOM BAR	6063-T6	-
4	SMI-008	AS REQ'D	DOOR SASH STOP	6063-T6	-
5	SMI-009	AS REQ'D	STD. ACTIVE/INACTIVE STILE	6063-T6	-
5A	SMI-081	AS REQ'D	H.D. HINGE STILE, ACTIVE/INACTIVE STILE	6063-T6	-
6	SMI-011	AS REQ'D	STD. HINGE STILE	6063-T6	-
7	SMI-012	AS REQ'D	TOP RAIL	6063-T6	-
8	SMI-013	AS REQ'D	BOTTOM RAIL (STD.)	6063-T6	-
8A	SMI-065	AS REQ'D	BOTTOM RAIL (HI-RISE)	6063-T6	-
9	SMI-015	AS REQ'D	DOOR STOP COVER	6063-T6	-
10	SMI-036	AS REQ'D	THRESHOLD BASE	6063-T6	-
11	SMI-037	AS REQ'D	THRESHOLD RAMP ADAPTOR	6063-T6	-
12	SMI-038	AS REQ'D	ADA THRESHOLD COVER	6063-T6	-
13	SMI-039	AS REQ'D	HI-RISE THRESHOLD COVER	6063-T6	-
14	SMI-058	AS REQ'D	ASTRAGAL	6063-T6	-
14A	SMI-083	AS REQ'D	ASTRAGAL	6063-T6	-
14B	SMI-084	AS REQ'D	ASTRAGAL	6063-T6	-
15	SMI-044	AS REQ'D	DOOR STOP BASE	6063-T6	-
16	SMI-PW001	AS REQ'D	TRANSOM ADAPTER	6063-T6	-
17	SMI-090001	AS REQ'D	PLAIN SNAP	6063-T6	-
18	SMI-046	AS REQD.	MID-RAIL	6063-T6	OPTIONAL
18A	SMI-105	2	MID-RAIL CORNER CLIP	6005-T5	-
19	SMI-092	AS REQ'D	GLASS STOP	6063-T6	-
20	-	AS REQD.	REINFORCING CHANNEL (TRANSOM)	A36 STEEL	-
21	SMI-094	AS REQ'D	PLAIN SNAP	6063-T6	-
22	SMI-096	AS REQ'D	DOOR SASH BASE	6063-T6	-
23	SMI-097	AS REQ'D	DOOR SASH STOP	6063-T6	-
24	SMI-051	AS REQ'D	DOOR STILE ALUM. REINF. FULL LENGTH	6005-T5	-
25	SMI-G01	AS REQ'D	TRANSOM GASKET (@ INTERIOR)	EPDM	TREMCO
26	SMI-G12	AS REQ'D	DOUBLE FACE FOAM TAPE (3/16" X 1/2")	VINYL FOAM	FRANK LOWE
27	SMI-G07	AS REQ'D	GASKET (@ EXTERIOR)	SANTOPRENE	CENTRAL PLASTICS, INC.
28	SMI-G11	AS REQ'D	SINGLE FACE FOAM TAPE (1/8" X 1/2")	VINYL FOAM	FRANK LOWE
29	SMI-B01	AS REQ'D	.385 DIA. BULB W'STRIPPING	RIGID PVC	CENTRAL PLASTICS, INC.
29A	SMI-G20	AS REQ'D	FLAP W'STRIPPING	VINYL	PEMKO
30	SMI-B03	AS REQ'D	PUSH-IN, DOOR PERIMETER SEALING.	RIGID PVC	CENTRAL PLASTICS, INC.
31	SMI-SB03	2 PER GL.	SETTING BLOCKS (1/4" X 3/8" X 4" LG.) AT 1/4 POINTS	EPDM	TREMCO, DUROMETER 80±5 SHORE A
32	SMI-SB05	2 PER GL.	SETTING BLOCKS (1/4" X 1 3/16" X 4" LG.) AT 1/4 POINTS	EPDM	TREMCO, DUROMETER 80±5 SHORE A
33	SMI-SB06	2 PER GL.	SETTING BLOCKS (3/8" X 5/8" X 4" LG.) AT 1/4 POINTS	EPDM	TREMCO, DUROMETER 80±5 SHORE A
34	SMI-SB04	AS REQ'D	SETTING BLOCK (3/8" X 1 1/4" X 4" LG.) AT 1/4 POINTS	EPDM	TREMCO, DUROMETER 80±5 SHORE A
35	SMI-W01	AS REQ'D	WOOL PILE	PILE	ULTRAFAB
36	SMI-P06	AS REQ'D	LEAF SEAL	PLASTIC	ULTRAFAB (E224)
37	-	2/ LEAF	3/8" THREADED ROD WITH NUT	STEEL	-
38	-	2/ LEAF	SUPPORT PLATE (1-1/2" X 3-3/8" X 3/16")	ALUMINUM	-
39	SMI-043	AS REQ'D	FRAME JAMB	6063-T6	-
40	SMI-71	AS REQ'D	CORNER KEY MALE	6005-T5	-
41	SMI-70	AS REQ'D	CORNER KEY FEMALE	6005-T5	-
43	#12 X 1 1/2"	4/CORNER	FRAME ASSEMBLY SCREWS	ST. STEEL	HEX. HEAD MACHINE SCREW
44	SMI-B03	AS REQD.	PUSH-IN, DOOR PERIMETER SEALING	RIGID PVC	CENTRAL PLASTICS INC.
45	SMI-074	AS REQD.	DOOR SWEEP COVER	6063-T6	-
46	SMI-075	AS REQD.	DOOR SWEEP BASE	6063-T6	-
47	SMI-G19	AS REQD.	DOOR SWEEP GASKET	VINYL	MELTPOINT PLASTICS
48	#8 X 3/4"	AS REQD.	DOOR SWEEP BASE FASTENERS	ST. STEEL	P. HD. PH SMS
49	SMI-068	AS REQD.	DOOR RAIL COVER	6063-T6	-
50	SMI-W01	AS REQD.	WOOL PILE	PILE	ULTRAFAB
51	#10 X 3/4"	2/ CORNER	THRESHOLD ASSEMBLY FASTENERS	ST. STEEL	PH SMS

SEALANTS:

ALL FRAME AND LEAF CORNERS AND INSTALLATION SCREWS SEALED WITH SILICONE.

Sealed: 7/12/2023

JALAL FAROOQ
LICENSE
No. 81223
STATE OF FLORIDA
PROFESSIONAL ENGINEER

FL #17682

AL-FAROOQ CORPORATION
ENGINEERS & PRODUCT DEVELOPMENT
9360 SUNSET DRIVE, SUITE 220
MIAMI, FLORIDA 33173 (C.A.N. 3538)
TEL. (305) 264-8100 FAX. (305) 262-6978

COMP-ANL\21-38F-AAG

SERIES 'SUMMIT' ALUMINUM OUT-SWING DOOR (L.M.I.)

Aldora Aluminum & Glass Products Inc.
4250 Coral Ridge Drive, Suite 101
Coral Springs, FL. 33065
Tel. (954) 784-6900 Fax. (954) 784-6901

revisions:

no	date	by	description

date: 05-04-21
scale: 3/8" = 1"
dr. by: TARIQ
chk. by:

drawing no. 21-38F

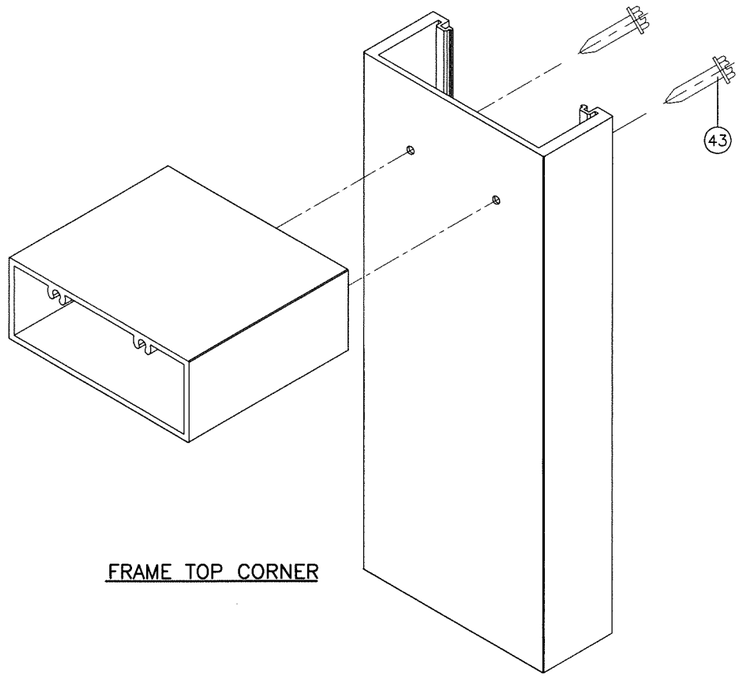

FRAME TOP CORNER

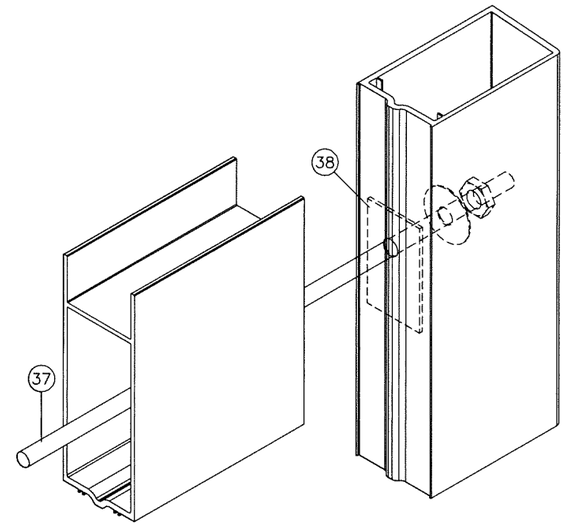

DOOR LEAF TOP/BOTTOM CORNER

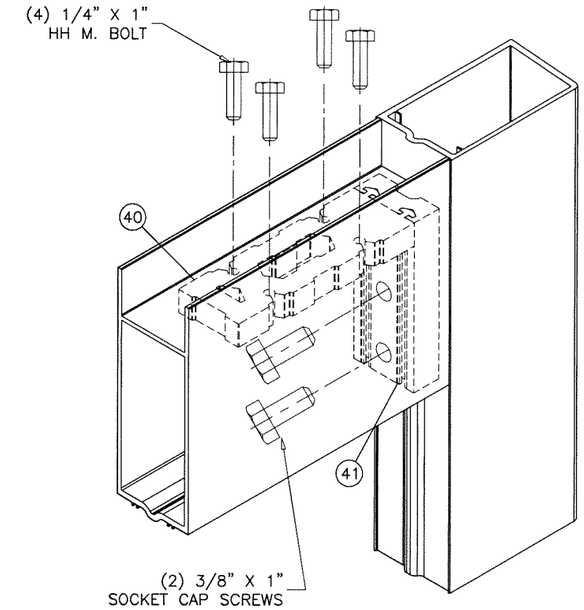

DOOR LEAF ALIGNMENT KEY
AT TOP/BOTTOM CORNER

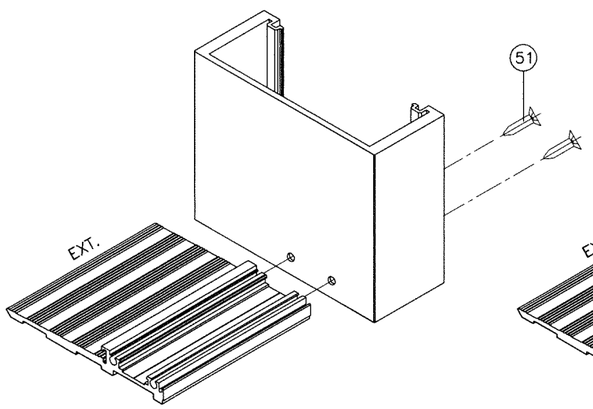

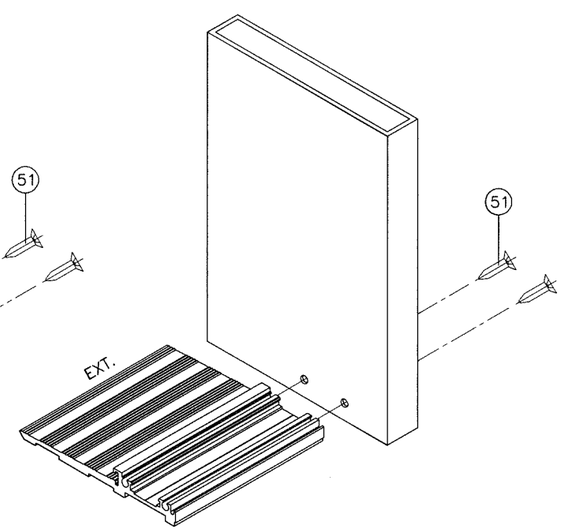

FRAME BOTTOM CORNER

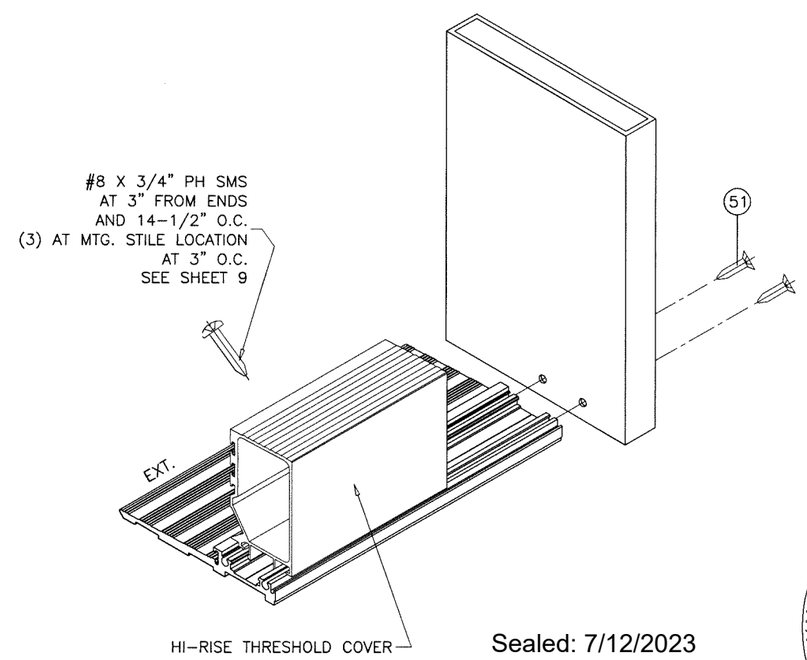

Sealed: 7/12/2023

JALAL FAROOQ
LICENSE
No. 81223
STATE OF FLORIDA
PROFESSIONAL ENGINEER

FL #17682

AL-FAROOQ CORPORATION
ENGINEERS & PRODUCT DEVELOPMENT
9360 SUNSET DRIVE, SUITE 220
MIAMI, FLORIDA 33173 (C.A.N. 3538)
TEL. (305) 264-8100 FAX. (305) 262-6978

COMP-ANL\21-38F-AAG

SERIES 'SUMMIT' ALUMINUM OUT-SWING DOOR (L.M.I.)

Aldora Aluminum & Glass Products Inc.
4250 Coral Ridge Drive, Suite 101
Coral Springs, FL. 33065
Tel. (954) 784-6900 Fax. (954) 784-6901

revisions:

no	date	by	description

date: 05-04-21
scale: -
dr. by: TARIQ
chk. by:

drawing no. 21-38F